12821 THRU 12825

12825 THRU 12821

Diag. Cht. No. 1.

FORM C&GS-504

U.S. DEPARTMENT OF COMMERCE
ENVIRONMENTAL SCIENCE SERVICES ADMINISTRATION
COAST AND GEODETIC SURVEY

DESCRIPTIVE REPORT

Type of Survey Chart Compilation

Field No. Ph-6501 Office No. T-12821 thru T-12825 (Chart 635 S.C.)

LOCALITY

State South Carolina - Georgia

General locality Savannah River

Locality Pfeiffers Landind to Augusta

1964-65

CHIEF OF PARTY
J.K.Wilson, Chief of Field Party
J.Bull,Portsmouth Photo. Officer

LIBRARY & ARCHIVES

DATE November 1967

USCOMM-DC 37022-P66

FORM C&GS-181a (12-61)

U.S. DEPARTMENT OF COMMERCE
COAST AND GEODETIC SURVEY

T-12821W T-12822
T-12821E T-12823N

DESCRIPTIVE REPORT - DATA RECORD

(CHART 635) S.C.

T-12823S T-12824E
T-12824W T-12825N
T-12825S

PROJECT NO. (II):

21510 PH 6501

FIELD OFFICE (II):

STATESBORO, GEORGIA

CHIEF OF PARTY

J. K. WILSON

PHOTOGRAMMETRIC OFFICE (III):

PORTSMOUTH, VA. (NORFOLK REGIONAL OFFICE)

OFFICER-IN-CHARGE

J. BULL

INSTRUCTIONS DATED (II) (III):

FIELD - DEC. 16,1964
OFFICE - MAY 14,1965
GENERAL (PROVISIONAL) REVISED (NOT DATED) RECIEVED JUNE 4,1965
SUPPLEMENTAL - JUNE 1,1965
LETTER - (SECURITY AREA) FEB. 8,1965

METHOD OF COMPILATION (III):

KELSH PLOTTER, WILD B-8, AND GRAPHIC

MANUSCRIPT SCALE (III):

1:20,000

STEREOSCOPIC PLOTTING INSTRUMENT SCALE (III):

1:6,000 (KELSH) 1:5,000 (B-8)

DATE RECEIVED IN WASHINGTON OFFICE (IV):

DATE REPORTED TO NAUTICAL CHART BRANCH (IV):

APPLIED TO CHART NO.

DATE:

DATE REGISTERED (IV):

GEOGRAPHIC DATUM (III):

N.A. 1927 MERCATOR PROJECTION

VERTICAL DATUM (III): MHW

~~MEAN SEA LEVEL~~ EXCEPT AS FOLLOWS:

Elevations shown as (25) refer to mean high water

Elevations shown as (5) refer to sounding datum

i.e., mean low water or mean lower low water

REFERENCE STATION (III):

HATTIEVILLE, 1901

LAT.: 33° 06' 40.199"

LONG.: 81° 36' 37.039"

[X] ADJUSTED
[ ] UNADJUSTED

PLANE COORDINATES (IV):

Y = 465,437.14' X = 1,813,127.01'

STATE: S. CAROLINA

ZONE: SOUTH

ROMAN NUMERALS INDICATE WHETHER THE ITEM IS TO BE ENTERED BY (II) FIELD PARTY, (III) PHOTOGRAMMETRIC OFFICE, OR (IV) WASHINGTON OFFICE.

WHEN ENTERING NAMES OF PERSONNEL ON THIS RECORD GIVE THE SURNAME AND INITIALS, NOT INITIALS ONLY.

FORM C&GS-181b
(12-61)

U.S. DEPARTMENT OF COMMERCE
COAST AND GEODETIC SURVEY

DESCRIPTIVE REPORT - DATA RECORD

(CHART 635) S.C.

FIELD INSPECTION BY (II): E. W. Hartford	DATE: March, 1965
MEAN HIGH WATER LOCATION (III) (STATE DATE AND METHOD OF LOCATION): AIR PHOTO COMPILATION DATES OF PHOTOGRAPHY: PAN Oct. 30, 1964 Nov. 21, 1964 — COLOR Nov. 21, 1964 Feb. 27, 1965	
PROJECTION AND GRIDS RULED BY (IV): MERCATOR - J.E.G. - Washington Science Center STATE GRIDS - K. Boyle	DATE May, 1965 June, 1965
PROJECTION AND GRIDS CHECKED BY (IV): MERCATOR - A. J. L. - Washington Science Center STATE GRIDS - B. Barge * See below	DATE May, 1965 June, 1965
CONTROL PLOTTED BY (III): K. BOYLE B. BARGE	DATE June and July, 1965
CONTROL CHECKED BY (III): B. BARGE K. BOYLE	DATE June and July, 1965
RADIAL PLOT OR STEREOSCOPIC CONTROL EXTENSION BY (III): WASHINGTON SCIENCE CENTER	DATE June, 1965
STEREOSCOPIC INSTRUMENT COMPILATION (III): B. Barnes, L. Sullivan, L. Neterer, K. Boyle, B. Wilson, C. Blood, H. Cordell, A. Santillan — PLANIMETRY	DATE July-Aug., 1965
CONTOURS	DATE
MANUSCRIPT DELINEATED BY (III): Same as above listed	DATE Aug.-Sept., 1965
SCRIBING BY (III): H. Cordell, B. Barge, L. Graves, C. Blood, L. Sullivan, B. Barnes, A. Santillan	DATE Aug.-Oct., 1965
PHOTOGRAMMETRIC OFFICE REVIEW BY (III): A. Rauck, Jr. C. Bishop L. Graves R. Smith	DATE Sept.-Oct., 1965

REMARKS:

Data for this chart compilation is composed of 9 T-sheet compilations: T-12821W/2 through T-12825S/2, from Latitude 32° 47' to latitude 33° 34'

* Plotted state grid intersections were furnished the Marine Chart Division. They are not included on the registered maps

SGD

FORM C&GS-181c
(12-61)

U.S. DEPARTMENT OF COMMERCE
COAST AND GEODETIC SURVEY

DESCRIPTIVE REPORT - DATA RECORD
(CHART 635) S.C.

CAMERA (KIND OR SOURCE) (III):

SINGLE LENS TYPE "S" AND "L"

REFER TO Transmittal letter copies in back of report for list of field photos

PHOTOGRAPHS (III)

NUMBER	DATE	TIME	SCALE	STAGE OF TIDE
64 S(C) 1103A thru 64 S(C) 1313A	Nov. 21, 1964	11:37 thru 13:21	1:10,000	Above Point of Estimated Tide Water *
65 L(C) 948 thru 65 L(C) 1016	Feb. 27, 1965	13:30 thru 13:58	1:10,000	" *
64 S 9503 thru 9506	Oct. 13, 1964	12:12	1:30,000	Above Point *
64 S 9527 " 9534	"	12:28	"	" " *
64 S 9546 " 9565	"	12:43	"	" " *
64 S 9592 " 9597	"	13:01	"	" " *
64 S 9601 " 9612	"	13:07	"	" " *
64 S 9627 " 9635	"	13:25	"	" " *
64 S 9655 " 9674	"	13:40	"	" " *

TIDE (III) NOT COMPUTED

	RATIO OF RANGES	MEAN RANGE	SPRING RANGE
REFERENCE STATION: NONE USED			
SUBORDINATE STATION: " "			
SUBORDINATE STATION: " "			

~~WASHINGTON OFFICE~~ FINAL REVIEW BY (IV): M.M. SLAVNEY L.F. BEUGNET NORFOLK REGIONAL OFFICE ** See below — DATE: Dec. 1965, JAN. 1966

PROOF EDIT BY (IV): " " — DATE: Jan. 1966

		RECOVERED:	IDENTIFIED:
NUMBER OF TRIANGULATION STATIONS SEARCHED FOR (II):	32	18	18
NUMBER OF BM(S) SEARCHED FOR (II):	None	None	None

NUMBER OF RECOVERABLE PHOTO STATIONS ESTABLISHED (III): None

NUMBER OF TEMPORARY PHOTO HYDRO STATIONS ESTABLISHED (III): None

REMARKS:

* CHART DIVISION DATA INDICATES THE TIDES ARE NON-PERCEPTIBLE AT A POINT 44.8 MILES UPSTREAM FROM THE MOUTH OF THE SAVANNAH RIVER. AT 34.8 MILES FROM THE MOUTH OF THE SAVANNAH RIVER, THERE IS A 1.5' TO 2.0' MEAN RANGE OF TIDE. THESE CONDITIONS EXIST ONLY DURING NORMAL RIVER CONDITIONS.

** S.G. BLANKENBAKER APRIL 1966

NOTE: Comparison Prints & CSI cards stored in Federal Records Center

T-12821W/2 THROUGH T-12825S/2
(CHART 635) S.C.

COMPILATION RECORD	COMPLETION DATE	REMARKS
PRELIMINARY	July-Aug.,1965	SUPERCEDED
FIELD EDIT APPLIED	Aug.-Sept.,1965	

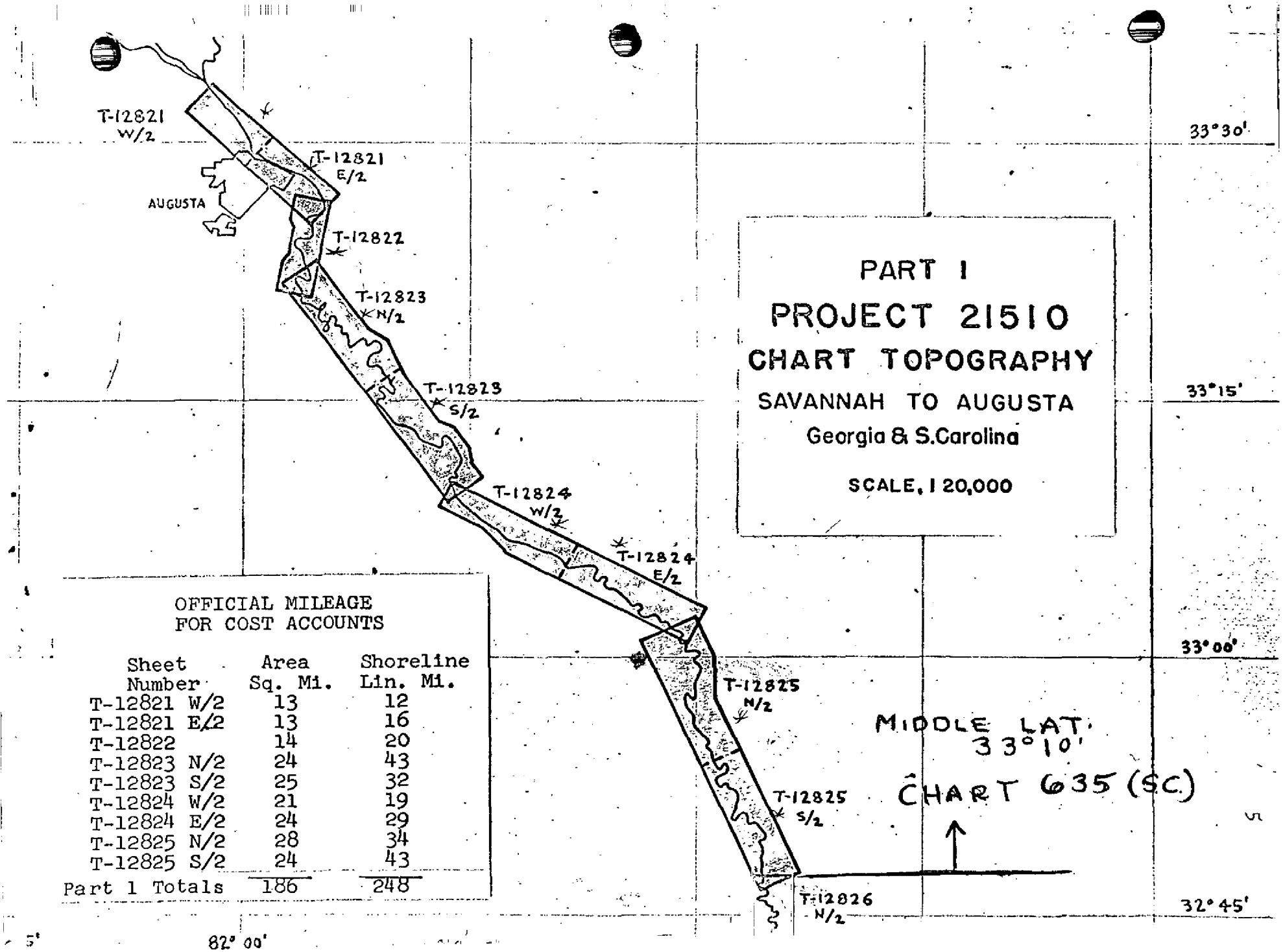

OFFICIAL MILEAGE
FOR COST ACCOUNTS

Sheet Number	Area Sq. Mi.	Shoreline Lin. Mi.
T-12821 W/2	13	12
T-12821 E/2	13	16
T-12822	14	20
T-12823 N/2	24	43
T-12823 S/2	25	32
T-12824 W/2	21	19
T-12824 E/2	24	29
T-12825 N/2	28	34
T-12825 S/2	24	43
Part 1 Totals	186	248

CHART 635 SC

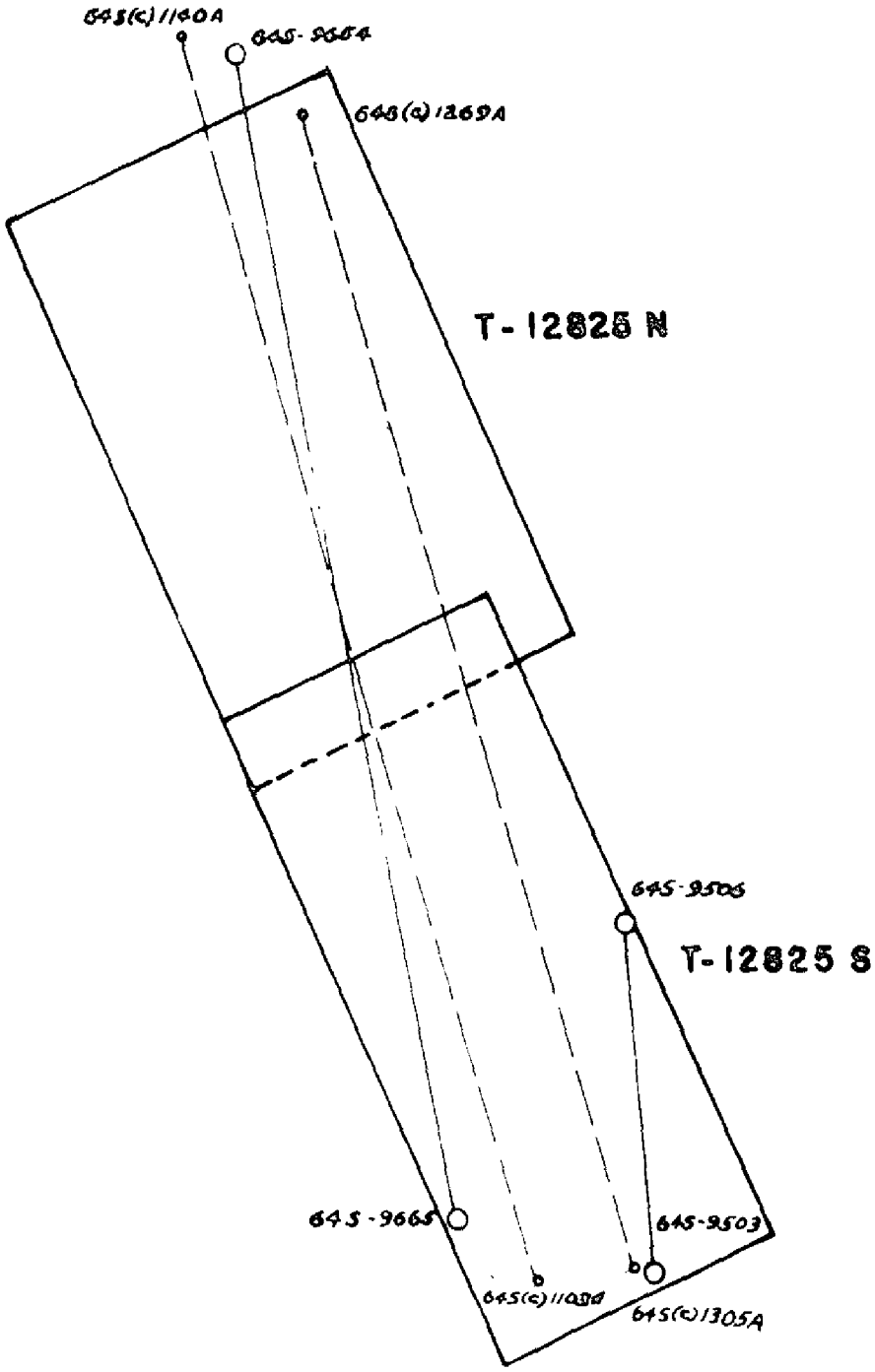
645(c)1140A
645-9664
648(c)1269A
T-12825 N
645-9506
T-12825 S
645-9665
645-9503
645(c)1103A
645(c)1305A

CHART 635 SC

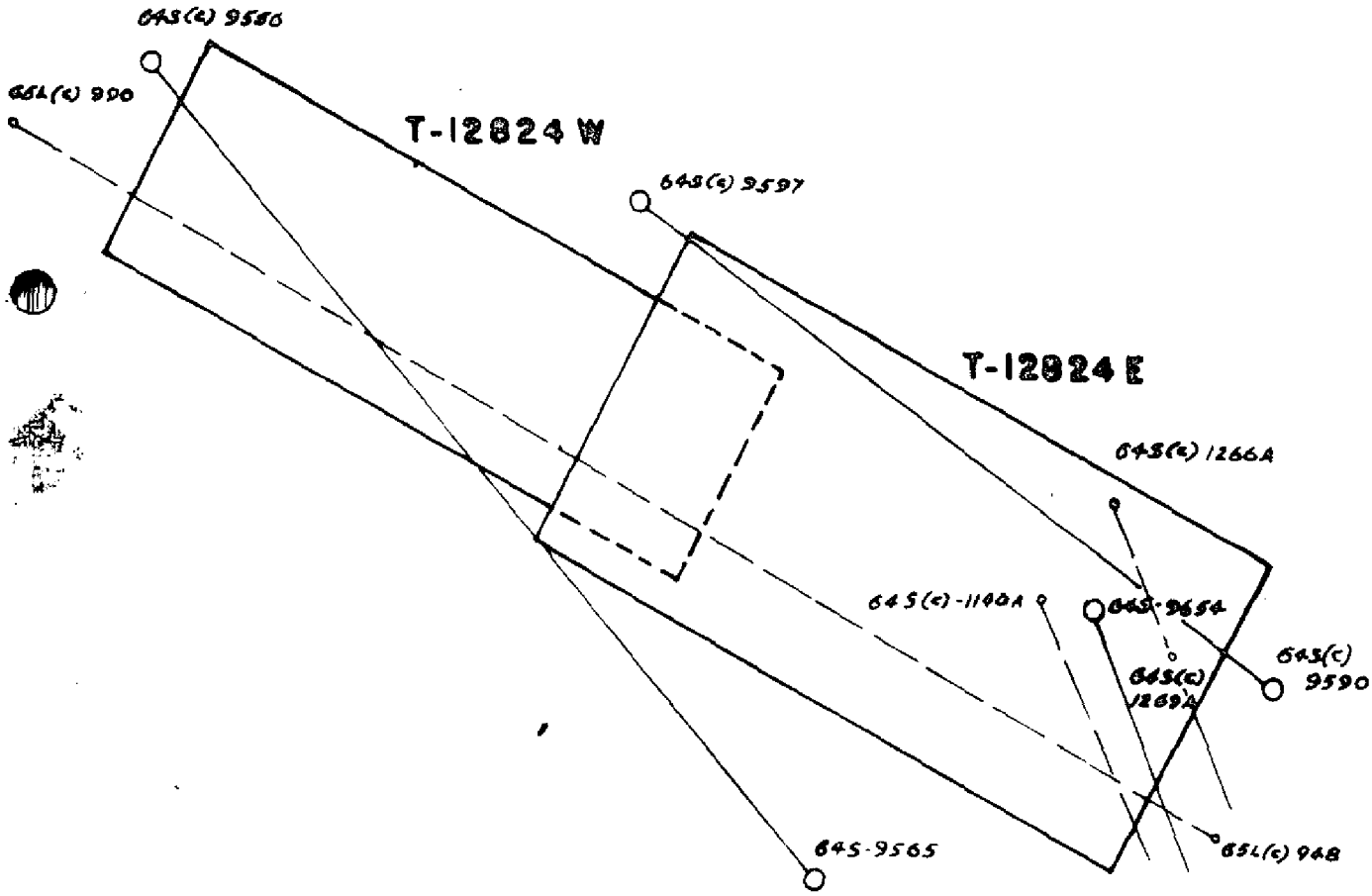
645(c) 9580
651(c) 990
T-12824 W
645(c) 9597
T-12824 E
645(c) 1266A
645(c)-1140A
645-9654
645(c) 9590
645(c) 1269A
645-9565
651(c) 948

CHART 635 SC

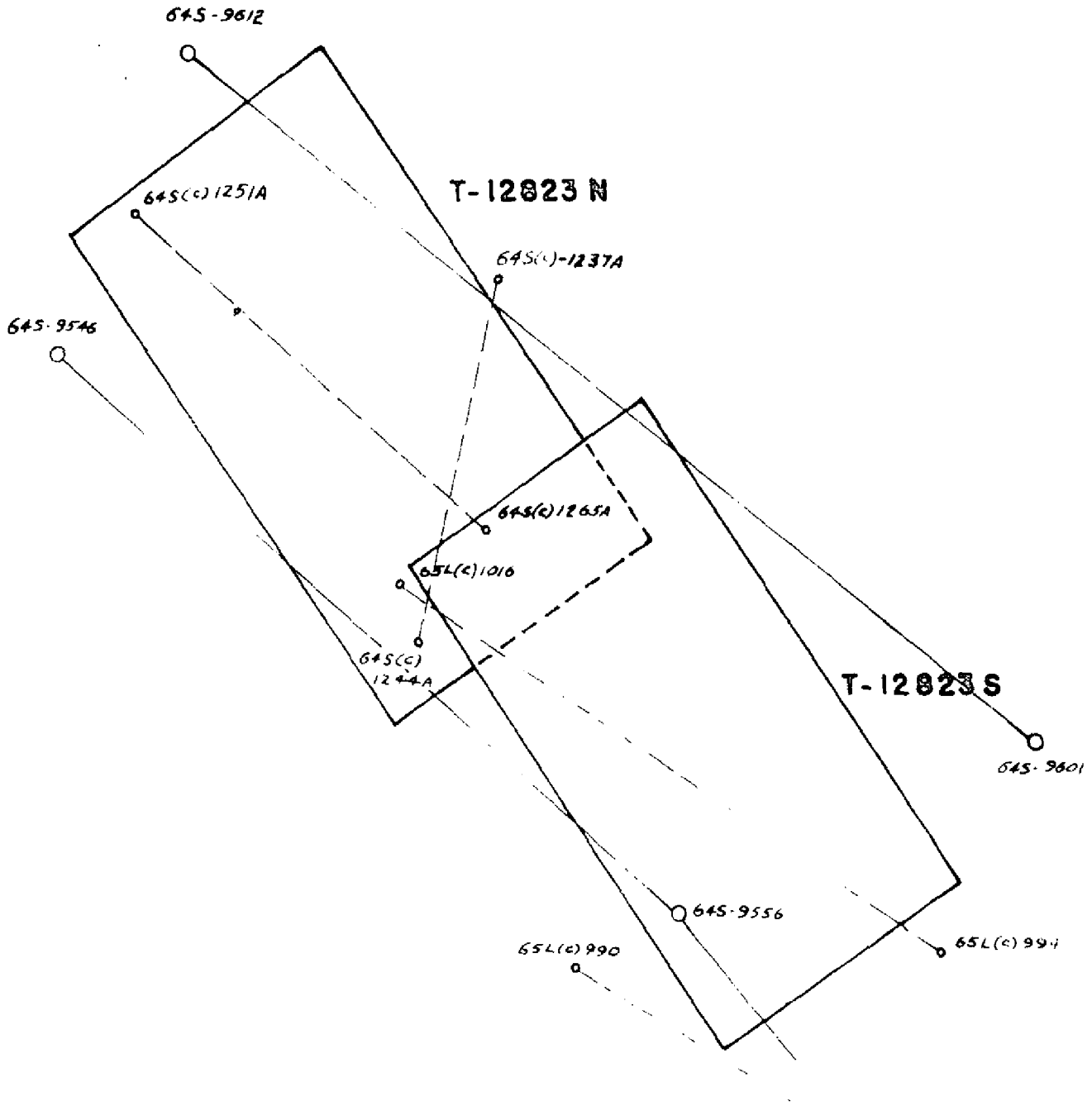
645-9612
T-12823 N
645(c)1251A
645(c)-1237A
645-9546
645(c)1265A
65L(c)1016
645(c)
1244A
T-12823 S
645-9601
645-9556
65L(c)990
65L(c)994

CHART 635 SC

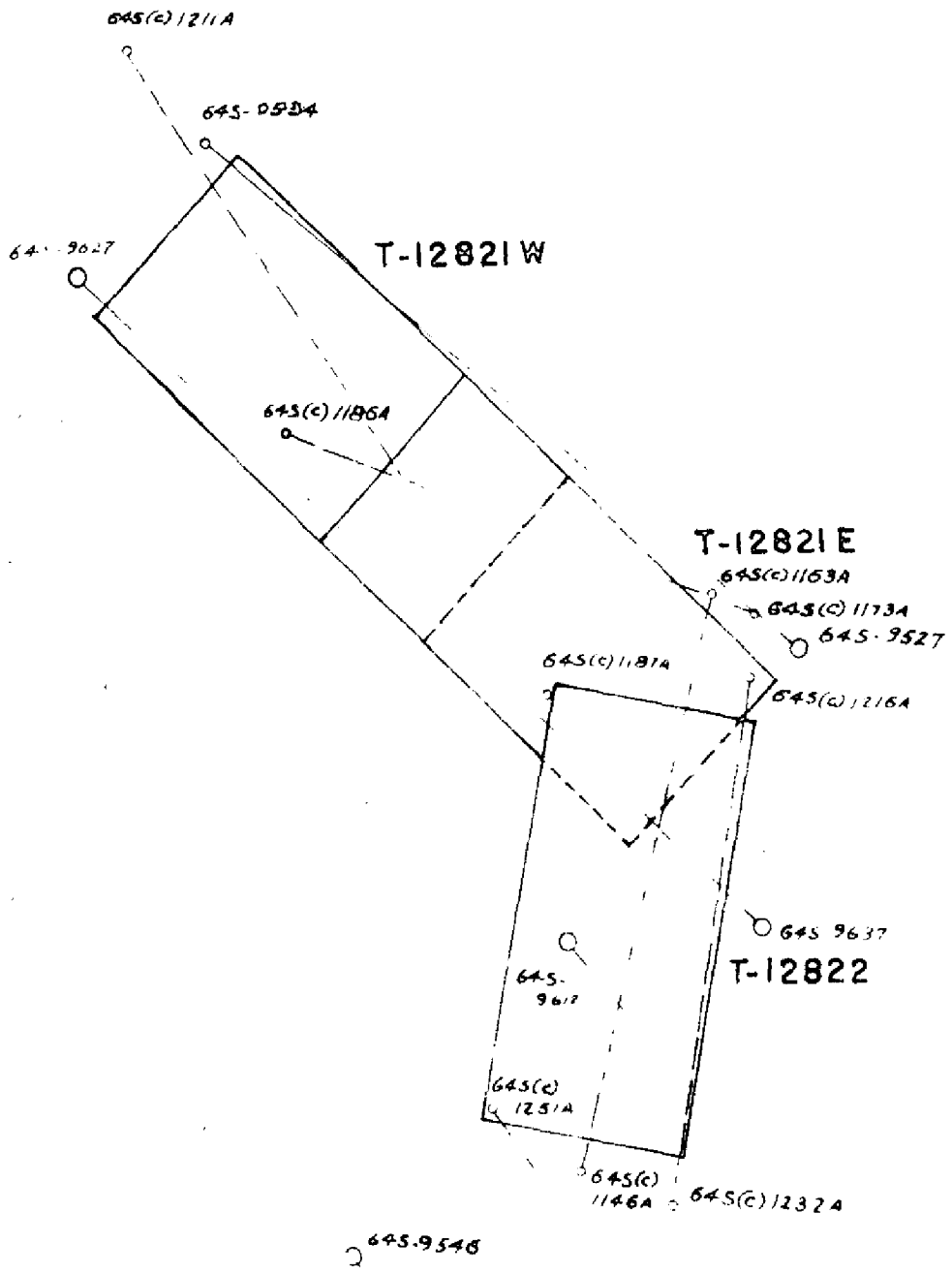
645(c) 1211A
645-0534
64 - 9627
T-12821W
645(c) 1186A
T-12821E
645(c) 1163A
645(c) 1173A
645-9527
645(c) 1181A
645(c) 1216A
645 9637
T-12822
645-
9612
645(c)
1251A
645(c)
1146A
645(c) 1232A
645.9548

SUMMARY TO ACCOMPANY
DESCRIPTIVE REPORT FOR T-12821 thru T-12825 (Chart 635)

Nine chart compilation manuscripts, T-12821 E/2 and W/2, T-12822, T-12823 N/2 and S/2, T-12824 E/2 and W/2, and T-12825 N/2 and S/2 at 1:20,000 scale, comprise the northern portion of PH-6501 (21415). These manuscripts, see sketch on Page 5, are to be used in the compilation of Small Craft Chart 635.

This is a stereoscopic instrument project to be used in the compilation of 1:20,000 scale Small Craft Charts 634 and 635, Savannah River from Savannah to Augusta, Georgia. The stereo-bridge was run on 1:70,000 scale RC-9 photographs, taken Oct. 13, 1964, and drilled points were transferred to 1:30,000 scale RC-8 diapositives taken October 13, 1964. Color transparencies at 1:10,000 scale, taken Nov. 21, 1964 and Feb. 27, 1965 were furnished to assist in delineation of the shoreline and identification of the aids to navigation.

The field operations preceeding compilation were confined to control identification for the stereo bridge, and identification of aids to navigation and landmarks for nautical charts. Compilation was done without further field inspection.

Field edit was confined to the river, and details visible from the river, including aids to navigation and landmarks for charts.

Chart compilation manuscripts were furnished the Chart Division before final review. The Registration manuscript is furnished for registry, and a cronaflex copy is furnished for the Chart Division.

FIELD REPORT
Project 21510
SAVANNAH RIVER

Field work was accomplished in accordance with Instructions dated December 16, 1964, reference 6314, and was comprised of the following phases.

HORIZONTAL CONTROL

Horizontal control identification was started January 13th and completed February 19th. Eighteen control stations were recovered and identified; fourteen others were searched for and not recovered. It is believed that control requirements have been satisfied.

Quality of the photographs used for identification was fair.

LANDMARKS AND AIDS TO NAVIGATION

Investigation and identification of nonfloating aids to navigation and landmarks was completed March 4, 1965. Form 567 is being submitted for landmarks only.

The river was traversed by small boat from Savannah to Augusta to inspect and identify nautical landmarks. While doing so, aids visible on the photographs were circled and the approximate positions of the ones not visible were circled, as an aid to the compiler. Most of the numbers have been broken off the aids, apparently by high water (those with numbers were noted on the photos) and some of the piling are missing. The piling are concrete and about 8 inches square. Some are at the down-river dolphin of several, angling inshore upriver; others are at the outer end of the down-river wood groin which is the longest of several, perpendicular to the shore. Also, a few obstructions in the river were noted, such as sunken barges and trees.

A few of the better boat ramps were circled for use by the field editor.

GEOGRAPHIC NAMES

This is the subject of a special report prepared by Philip B. Walbolt and submitted to the Washington Office on Feb. 18, 1965.

DATES OF DATA TRANSMITTALS

January 28, 1965, Reference No. 18; February 10, 1965, Reference No. 19; February 25, 1965, Reference No. 21; and March 12, 1965, Reference No. 26.

Submitted 3/12/65

Ernest W. Hartford

Ernest W. Hartford
Surveying Technician

Approved and forwarded

Joseph K. Wilson

Joseph K. Wilson,
Chief, Photo Party 759

PHOTOGRAMMETRIC PLOT REPORT

The Photogrammetric Plot Report, dated June, 1965 has been submitted with Descriptive Report for Chart 634.

ORM 164
4-23-54)

U.S. DEPARTMENT OF COMMERCE
DESCRIPTIVE REPORT

COAST AND GEODETIC SURVEY
CONTROL RECORD

MAP I CHART 635 PROJECT NO. PH-6501 SCALE OF MAP 1:20,000 SCALE FACTOR

STATION	SOURCE OF INFORMATION (INDEX)	DATUM	LATITUDE OR y-COORDINATE / LONGITUDE OR x-COORDINATE	DISTANCE FROM GRID IN FEET. OR PROJECTION LINE IN METERS FORWARD	(BACK)	DATUM CORRECTION	N.A. 1927 - DATUM DISTANCE FROM GRID OR PROJECTION LINE IN METERS FORWARD	(BACK)	FACTOR DISTANCE FROM GRID OR PROJECTION LINE IN METERS FORWARD	(BACK)
ROUSE, 1932	G.P. 9	N.A. 1927	32°51' 14.643"							
			81°23' 35.258"							
MILLHAVEN, 1932	G.P. 8	"	32°56' 07.869"							
			81°33' 47.747"							
GIRARD, 1932	G.P. 8	"	33°01' 25.582"							
			81°40' 40.283"							
HANCOCK, 1932	G.P. 8	"	33°09' 20.824"							
			81°47' 31.496"							
BARNEY, 1932	G.P. 19	"	33°17' 22.929"							
			81°54' 54.065"							
AUGUSTA J.B. WHITE TANK, 1932	G.P. 49	"	33°28' 32.31"							
			81°58' 07.84"							
AUGUSTA ST. PATRICKS CHURCH SPIRE, 1932	G.P. 49	"	33°28' 17.689"							
			81°58' 01.045"							
AUGUSTA LONGITUDE STATION, 1890	G.P. 48	"	33°28' 23.726"							
			81°58' 09.738"							
BUNCH, 1902-1932	G.P. 7	"	33°35' 03.809"							
			81°58' 44.123"							
CLARKS HILL, 1902 -1932	G.P. 7	"	33°40' 21.826"							
			82°10' 24.759"							

1 FT. = .3048006 METER

COMPUTED BY: A. C. Rauck, Jr. DATE: Sept. 24, 1965

CHECKED BY: A. Santillan DATE: Sept. 24, 1965

GPO-DC-57843

Compilation Report
Chart 635

31. DELINEATION

Delineation of T-12821E and T-12821W was done with the Kelsh plotter and the Wild B-8 plotter.

The remaining seven T-sheets were compiled with the Kelsh plotter.

All sheets were further completed by using the color transparancies, which supplemented the 1:30,000 scale compilation photography. These color transparancies were particularly important in the delineation and compilation of offshore snags, trees in water, and non-floating aids, especially where tree overhang and shadow obliterated details on the Kelsh models.

The high altitude bridging photos were used with the vertical projector only where it became necessary to complete a T-sheet not adequately covered by the 1:30,000 scale compilation photos. The flight paths of the compilation photos covering T-12823N were located on each side of the river in such a manner that side photo lap was very poor, and a portion of the shoreline of this sheet was compiled from the high altitude photos.

32. CONTROL

Vertical control was not required for this project.

Refer to the photogrammetric Plot Report which is included with Descriptive Report for Chart 634.

Pass points from the analytic bridge were held. In some Kelsh models, it was difficult to clear parallax because of dark photography and all pass points could not be held. In these models the pass points closest to the river were held.

On T-12823N, the flight lines were on each side of the Savannah River. These flight lines were so poorly flown that side lap was very inadequate and in some places non-existent.

In these models, where it was not possible to hold all pass points, those points parallel to the river were held.

Where lack of side lap between these flight lines occurred, the gap area was filled, by compiling from the bridging photos with the vertical projector.

33. SUPPLEMENTAL DATA

Supplemental data consisted of the following quadrangles:

Augusta West,	U.S.C. of E.	Scale	1:24,000	Dated	1957
Augusta ,	"	"	1:62,500	"	1921
Clarks Hill ,	"	"	"	"	1941
Warrensville,	"	"	"	"	1923
Greens Cut ,	"	"	"	"	1920
Hilltonia ,	"	"	"	"	1943
Allendale ,	"	"	"	"	1919
Ellenton ,	"	"	"	"	1921
Peeples ,	"	"	"	"	1943

33. SUPPLEMENTAL DATA (Cont.)

Although these quadrangles were initially submitted for use as geographic names, they were also for comparison purposes to meet the requirements of the combined Comparison - Field Edit print.

Comparison showed very little detail as regards shoreline and offshore details. Much change, in the course of the river, has occured since the dates of these quadrangles. Numerous man made cut-offs appear in the new compilation which are not in evidence on the quadrangle maps.

All of the T-sheets in the area of this new small craft chart 635 are well above the limits of tide water and there were no inland charts or prior bureau surveys available for further supplemental use or comparison.

34. CONTOURS AND DRAINAGE

Contours are inapplicable to this project.

Drainage compilation, in some instances, was not good, because of photo or Kelsh plate quality or the inablilty to properly trace drainage through swamp areas. The color transparencies were used to delineate drainage in these areas, and where color coverage was inadequate, the quadrangle maps and the vertical projector was used.

The following ponds and drainage features are typical examples of drainage which appear to be non-existant on the photography, although they were recommended by the Geographic Names Section. These were traced from the quadrangle maps:

Roberson Round Ponds
Breakover Pond
Barn Gut
Paris Lake
Black Gut
Tower Three Runs

35. SHORELINE AND ALONGSHORE DETAILS

There is no field inspection for this project. See Field Report and Notes from the Field Editor submitted with Descriptive Report.

The delineation of shoreline is largely an apparent shoreline, inasmuch as a large part of both shores are mostly swamp and some marsh. The swampy shoreline is overhung with trees and shadow and without the benefit of shoreline inspection, the compiler ascertained the shoreline to be [illegible] somewhat beneath this shadow and tree overhang.

No low water lines have been delineated, but shallow and shoal lines, both the office interpretation and the field editors verification, have been delineated.

Alongshore details such as areas foul with trees, stumps and snags, as well as trees in water were shown and verified during field edit.

Shoreline structures, other than groins, were limited to the north end of this project, along the shoreline at Augusta, Ga. These were shown as verified by the field editor.

36. OFFSHORE DETAILS

Refer to Notes from the Field Editor, submitted with this descriptive report.

Office interpretation of offshore details were called to the field editor's attention for verification and/or clarification. These items were then compiled or deleted as called for by the edit.

Most offshore details, groins excepted, appear in the vicinity of Augusta, Ga.

37 LANDMARKS AND AIDS

Forms 567 are submitted with this report for the 37 aids to navigation, and 11 landmarks to be charted, and one aid to be deleted.

These aids and landmarks were plotted directly from the Kelsh and B-8 models, when they could be seen with certainty. When shadow or tree overhang made this impossible, they were delineated from the color transparencies. All were verified by the field editor, and none were plotted by fix, except one daybeacon which lies within the area of T-12821E. This fix was furnished by field editor.

38. CONTROL FOR FUTURE SURVEYS

There ~~was~~ were no recoverable topographic stations or photo hydro stations established for this project.

39. JUNCTIONS

Junctions, consisting of overlap matches were made between each of the nine T-sheets within the limits of this new chart 635.

At the south end of this chart 635, T-12825S joins with T-12826N of chart 634. The scale change inherent in the construction of a Mercator projection, especially when two systems of different middle latitudes join, was very apparent. This junction was resolved by using the vertical projector to change the scale of one to fit the other.

40. HORIZONTAL AND VERTICAL ACCURACY

Refer to Photogrammetric Plot Report submitted with descriptive report for Chart 634, and item 32, Control, of this report

41. DETAILS NOT COVERED BY FIELD INSPECTION OR EDIT

No interior field inspection or edit was made. All inspection and/or edit was confined to shoreline only. Refer to Field Inspection Report and Notes from the Field Editor submitted with this report.

Public buildings, schools, churches, and any radio or T.V. towers (not of landmark value) were shown as per the project instructions.

These were delineated from the quadrangle maps covering the area, by projecting them to scale and further verifying their existance by comparison with the photography. This was necessary because of the age of the source material. There are no prior bureau surveys or nautical charts of this area.

Swamp areas were very difficult to determine from office interpretation of the photography. The quadrangle maps were used as an aid to locate the limits on the stereo-models. In areas where determination of swamp limits were difficult to delineate, they were used directly from the quadrangle maps.

The delineation of tree areas, was not included in the instructions of the project. These were shown and those clearings and tree areas not immediately adjacent to the shoreline, too small to be of value to charts, were eliminated.

Roads leading to the shoreline or shoreline facilities were delineated. Logging roads and trails of no value to charting were omitted, according to instructions.

Ponds, no longer in evidence on the photography but shown and named on the Geographic Name quadrangle, were delineated from the quadrangles and shown as intermittant ponds and labled.

42. BLUFFS OF LANDMARK VALUE

Bluffs, considered to be of possible landmark value were delineated prior to field edit. These were determined to be approximately 50' to 100' in height, from examination of the quadrangles and elevation readings from the Kelsh stereo-models. However, the field editor, during his verification, decided that most of these were of no value to charts and identified smaller, bare bluffs in the vicinities of facility areas and recommended these for charting.

46. COMPARISON WITH EXISTING MAPS

Refer to items 33 and 41 of this report.

Comparison was made with all existing quadrangle maps and all differences were noted for the field editor on the Combined Comparison-Field Edit ozalid prints according to instructions. Field edit resolved all questionable items.

47. COMPARISON WITH NAUTICAL CHARTS

There are no prior nautical charts, in the area of this new small craft chart. Refer to item 33 of this report.

ITEMS TO BE APPLIED TO NAUTICAL CHARTS IMMEDIATELY

None

ITEMS TO BE CARRIED FORWARD

None

Respectfully submitted

Albert C. Rauck, Jr.

A. C. Rauck, Jr.

Approved and forwarded

J. Hollis

for J. Bull
Norfolk Regional Officer

48. GEOGRAPHIC NAMES

Geographic names quadrangles and lists were submitted by Mr. A. J. Wraight, for each T-sheet in the area of this chart survey.

Refer to "Geographic Names" of the Field Report submitted with this report.

The name lists did not always agree with names underlined on the quadrangles and underlining of these names on the quadrangles was not as clear as they could have been.

Some names were marked in such a manner, that it was difficult to determine if the name was approved or just scratched through.

Several instances of new names were added to the quadrangles and no attempt had been made to delete the old name. These are noted on the registration ozalid.

The following names, which were approved names on the geographic name U.S.G.S. Ellenton Quadrangle and the name list, are for features not identifiable on the photography and appear to be non-existant. They were placed on the T-sheet in the same position as they appear on the name quadrangle:

ROBERSON ROUND PONDS
BREAKOVER POND
BARN GUT
PARIS LAKE
BLACK GUT

Names for objects not mapped were removed by final review.

The location of the name BROWNS LANDING was not clear on the Geographic Name sheet. It was placed in the bend of the Savannah River just north of TELFAIR BAY and east of STONY BLUFF LANDING.

The name LOWER THREE RUNS was applied to the stream which is nearest to the placement shown on the Ellenton Quadrangle.

An alphabetical list of those names used from the 9 name quadrangles are as follows:

CHART 635 T-12821W thru T-12825S

AUGUSTA

BAILEYS POINT
BADGER BRANCH
BEAR ISLAND CREEK
BARN GUT
BARNEY BLUFF
BEAUFORT ISLAND
BEAVERDAM CREEK
BERRYHILL GUT
BLACK GUT
BLACK LAKE
BLACKS LANDING
BLUE HOLE DITCH
BOGGY GUT CREEK
BONAIR
BOY SCOUT POND
BRADFORD POINT
BREAKOVER POND
BRIDGE CREEK
BRIAR CREEK
BRIAR CREEK LANDING
BRIERPATCH LAKE
BRIGHAMS LANDING
BROWNS LANDING
BROWNS MILL
BURTONS FERRY
BURTONS FERRY LANDING
BUSH FIELD
BUTLER CREEK

CASON DEAD RIVER
CAT DITCH
CENTRAL OF GEORGIA
CHARLESTON AND WESTERN CAROLINA
CHICKEN BRANCH
CLARKES LAKE
CLUBHOUSE RIDGE

48. GEOGRAPHIC NAMES (Cont.)

COHENS BLUFF LANDING
COLMAN LAKE
COUNTRY CLUB HILLS
CROOKED CUT
CUTTER LAKE

DEAD RIVER
DEVILS ELBOW

EAGLE POINT
ECHEE POND
ELLISONS LANDING

FENNELL HILL LANDING
FOX CREEK
FURSE MILL CREEK

GRAYS LANDING
GREEN LOG POINT
GRIFFINS LANDING

HANCOCK LANDING
HARDENS DEAD RIVER
HATTIE CREEK
HERSHMAN LAKE
HILL CORNER
HOG GUT
HOLLOW CREEK
HOLMES DEAD RIVER
HORSE CREEK
HORSESHOE LAKE
HOUSE LAKE
HOWARDS LAKE

INTERSTATE 20
ISLAND LAKE

JOBBER CREEK
JOHNSONS LANDING

KING CREEK

LAGOON
LAKE OLMSTEAD
LITTLE BRIER CREEK
LITTLE BRIERPATCH LAKE
LITTLE HELL LANDING
LITTLE PINE CREEK
LITTLE PINE ISLAND
LITTLE SPIRIT CREEK
LITTLE SWEETWATER CREEK
LOWER SILVER BLUFF
LOWER THREE RUNS

MC BEAN CREEK
MILBURY
MILLER LAKE
MILLETT
MOUNT LAKE

NEWBURY CREEK
NEW SAVANNAH BLUFF
NORTH AUGUSTA

PARIS LAKE
PIPE CREEK
POINT COMFORT
POSSOM EDDY
PRESCOTT LAKE

QUEEN LAKE

RAES CREEK
RED BLUFF LANDING
RED LAKE
REEDS CREEK
RHODES MOUND
RING JAW POINT
ROBERSON ROUND PONDS
ROCK CREEK
ROCKY CREEK
ROYAL LAKE

SANDBAR FERRY
SAVANNAH RIVER
SAUCY BOY POINT
SHELL BLUFF LANDING
SHOEMAKE LAKE
SILVER BLUFF
SMITHS LAKE CREEK
SMITH LAKE
SOUTHERN
SPANISH CUT
SPIRIT CREEK
SPRING RUN
STATE HIGHWAY 28

48. GEOGRAPHIC NAMES (Cont.)

STATE HIGHWAY 73
STATE HIGHWAY 104
STEEL CREEK LANDING
STONY BLUFF LANDING
STONY CREEK
SWEETWATER CREEK
SYRUP LAKE

TELFAIR BAY

WHIRLIGIG POINT
WHITES MOUND
WHITE WOMANS POINT
WILDCAT POINT

JOB PH-6501

SAVANNAH RIVER
Notes from Field Editor

This report is submitted for nineteen sheets along the Savannah River from Savannah, Georgia to North Augusta, Georgia. The field edit was accomplished from August 16 through August 31, 1965.

1. Obstructions in Water

As a whole, the compiler has done an excellent job on the delineation of trees, snags, stumps etc. along the waters edge. Many trees have fallen in the water where the bank has eroded. Other trees, which overhang the water, are mainly willow and gum. Sometimes these trees grow in the water especially in shallow places. Dead trees, snags etc. will photograph white. The cut-offs are shoaling-up fast and many of them are barely navigable.

We concur with the Washington Office suggestion that a general note be shown on the new charts concerning foul areas adjacent to the shoreline and that navigators use caution and be on the lookout for floating logs, debris, etc.

Generally, the river, in its center portion, was free from obstructions. There is nearly always a strong current which tends to move the obstructions.

2. Bluffs

All bluffs were checked from the river to ascertain their value as landmarks. Most of the ones questioned by the compiler could not be seen from the river. You will note that the majority recommended are located near an old landing. The swamp trees are very tall, therefore obstructing the view of the bluffs.

3. Aids to Navigation

All aids to navigation were thoroughly checked. They h been described as to - type, color, condition and number. In accordance with a memorandum of August 10, form 567 f the aids will be submitted by the photogrammetric office The aids, with the exception of a few at Savannah, cons of a one foot square precast concrete pile, which pro about 10 to 12 feet above high water. This concrete p is usually about 2 to 3 feet downstream from the dow groin. In those cases where the aid was not on the groin, it has been noted on the field edit sheet.

The groins consist of a dolphin like structure 6 to 8 piles tied together) on the offshore end of of single pile lashed together with cable.

4. Landmarks for Charts

All landmarks were checked during field edit. One new landmark is recommended. It is located west of the end of n navigation. Our field man, who investigated landmarks in the beginning, did an excellent job.

5. Boat Landings

A thorough investigation of boat landings was made. It was found that the quadrangle covering the area had many places shown as landings. Many of these are privately owned and of no value as a launch area. The names, however, are well known and should be shown on the new charts. Most of the launching ramps are maintained by the State or County, both in Georgia and South Carolina.

6. General

The west lane of US Highway 301, where it crosses the Savannah River, was under construction. Interstate Highway 20, in the western part of chart 635, was also under construction.

The Savannah River is not navigable a few miles upstream from Augusta. Rapids block-off further navigation. This area was inaccessible to the field editor. There are numerous rocks.

Submitted: September 1
1965

Joseph K. Wilson
Chief Photo Party 759

GEOGRAPHIC NAMES

Ph 21510 (Warrenville, S.C.-Ga.)

T-12821

Fox Creek
North Augusta
Pole Branch
Savannah River

A. J. Wraight

A. J. Wraight
Geographic Branch

GEOGRAPHIC NAMES

Ph 21510 (Augusta West, Ga.)

T- 12821

Augusta
Country Club Hills
Lake Olmstead
Raes Creak

A. J. Wraight

A. J. Wraight
Geographic Branch

GEOGRAPHIC NAMES

Ph 21510 (Clarks Hill, S.C. - Ga.)

T- 12821

Boy Scout Pond
Rock Creek
Savannah River
Bonair
Fox Creek
Reeds Creek
Poverty Hill

A. J. Wraight

A. J. Wraight
Geographic Branch

GEOGRAPHIC NAMES

Ph 21510 (Augusta, Ga.-S.C.)

T- 12822

Bush Field (Augusta Municipal Airport)
Spirit Creek
Savannah River
Bear Island Creek
Island Lake
Blue Hole Ditch
Cat Ditch
Bradford Point
Horseshoe Lake
Little Pine Creek
Hardens Dead River
New Savannah Bluff
Butler Creek
Twiggs
Beach Island
Rocky Creek
Badger Branch
Sandbar Ferry
Cason Dead River

A. J. Wraight

A. J. Wraight
Geographic Names

GEOGRAPHIC NAMES

Ph 21510 (Green Cut Ga.-S.C.)

T-12823

Black Lake
Atomic Energy Commission
Island Creek
Newbury Creek
Red Lake
Piint Comfort
Upper Three Runs
Shell Bluff Landing
McBean Creek
Savannah River Plant
Savannah River

A. J. Wraight

A. J. Wraight
Geographic Names

GEOGRAPHIC NAMES

Ph 21510 (Augusta, Ga.-S.C.)

T- 12823

McBean Creek
Rhodes Mound
Cutter Lake
Bush
Island Creek
Cowden
Grays Landing
Howards Lake
Eagle Point
Holmes Dead River
Colman Lake
Bridge Creek
Berryhill Gut
Barney Bluff
Bush Field
Little Spirit Creek
Little Brierpatch Lake
Lower Silver Bluff
Whites Mound
Baileys Point
Spirit Creek
Spanish Cut
House Lake
Jackson
Brierpatch Lake
Chicken Branch
Silverton
Silver Bluff
Savannah River
Clarkes Lake
Bear Island Creek
Hollow Creek
Hankinson

Kathwood Lake
Wasteway Pond
Island Lake
Blue Hole Ditch
Cat Ditch
Browns Hill
Bradford Point
Horseshoe Lake
Little Pine Creek
Hardens Dead River
New Savannah Bluff
Wright Spring Branch
Twiggs
Nail Spring

A. J. Wraight

A. J. Wraight
Geographic Names

GEOGRAPHIC NAMES

Ph 21510 (Greens Cut, GA.-S.C.)

T-12824

Beaverdam Creek
Fourmile Branch
Savannah River
Fourmile Branch

A. J. Wraight

A. J. Wraight
Geographic Branch

GEOGRAPHIC NAMES

Ph 21510 (Ellenton, S.C.-Ga.)

T- 12824 W

Brighams Landing
Beaverdam Creek
Ellisons Landing
Four Mile Branch
Griffins Landing
Pen Branch
Savannah River
Steel Creek
Jobler Creek

A. J. Wraight

A. J. Wraight
Geographic Branch

GEOGRAPHIC NAMES

Ph 21510 (Ellenton, S.C.-Ga.)

T-12824 E

Browns Landing
Black Gut
Barn Gut
Breakover Pond
Clubhouse Ridge
Little Sweetwater Cr.
Lower Three Runs
Little Pine Island
Echee Pond
Millett
Prescott Lake
Paris Lake
Pen Branch
Queen Lake
Royal Lake
Roberson Round Ponds
Smith Lake
Stony Bluff Landing
Syrup Lake
Savannah River
Sweetwater Creek
Shoemake Lake
Steel Creek Landing
Hill Corner
Devils Elbow
Hog Gut
Little Hell Landing
Telfair Bay
Furse Mill Creek

A. J. Wraight

A. J. Wraight
Geographic Branch

GEOGRAPHIC NAMES

Ph 21510 (Allendale, S.C.)

T-12825

Browns Mill
Martin
Smiths Lake Creek
Savannah River
White Womans Pt. Point

A. J. Wraight

A. J. Wraight
Geographic Names

GEOGRAPHIC NAMES

Ph 21510 (Hilltonia Ga.-S.C.)

T-12825

Briar Creek
Burtons Ferry
Burtons Ferry Landing
Braggs Mill Cr.
Bay Branch
Big Branch
Canes Store
Hershman Lake
Kittles Landing
Rocky Creek
New Bridge
Mount Lake
Savannah River

A. J. Wraight

A. J. Wraight
Geographic Branch

GEOGRAPHIC NAMES

Ph 21510 (Peeples, S.C.-GA.)

T-12825

Briar Creek Landing
Briar Creek
Brannans Bridge
Blacks Landing
Brierpatch Lake
Box Store
Beaufort Island
Cohens Bluff Landing
Crooked Cut
Dry Gall
Fridays Dream Point
Fennell Hill Landing
Johnsons Landing
King Creek
Little Briar Creek Brier
Miller Lake
Milbury
Mars Branch
Pipe Creek
Possom Eddy
Red Bluff Landing
Spring Run
Saucy Boy Point
Savannah River
Whirligig Point
Wildcat Point

Ring Jaw Point
Green Log Point

A. J. Wraight

A. J. Wraight
Geographic Names

49. NOTES FOR THE HYDROGRAPHER

None

25

FORM 182 (3-61)

50 **PHOTOGRAMMETRIC OFFICE REVIEW**
Chart 635 T.12821W

U.S. DEPARTMENT OF COMMERCE
COAST AND GEODETIC SURVEY

1. PROJECTION AND GRIDS	2. TITLE	3. MANUSCRIPT NUMBERS	4. MANUSCRIPT SIZE
CHB	NONE 4a Classification label Unclassified	CHB	CHB

CONTROL STATIONS

5. HORIZONTAL CONTROL STATIONS OF THIRD-ORDER OR HIGHER ACCURACY	6. RECOVERABLE HORIZONTAL STATIONS OF LESS THAN THIRD-ORDER ACCURACY (TOPOGRAPHIC STATIONS)
NONE	NONE

7. PHOTO HYDRO STATIONS	8. BENCH MARKS	9. PLOTTING OF SEXTANT FIXES	10. PHOTOGRAMMETRIC PLOT REPORT
NONE	NONE	NONE	Bridge

11. DETAIL POINTS: Kelsh

ALONGSHORE AREAS (Nautical Chart Data)

12. SHORELINE	13. LOW-WATER LINE	14. ROCKS, SHOALS, ETC.	15. BRIDGES
CHB	NONE	CHB	CHB HB

16. AIDS TO NAVIGATION	17. LANDMARKS	18. OTHER ALONGSHORE PHYSICAL FEATURES
NONE	CHB	CHB HB

19. OTHER ALONGSHORE CULTURAL FEATURES: CHB

PHYSICAL FEATURES

20. WATER FEATURES	21. NATURAL GROUND COVER
CHB	CHB
22. PLANETABLE CONTOURS	**23. STEREOSCOPIC INSTRUMENT CONTOURS**
NONE	NONE
24. CONTOURS IN GENERAL	**25. SPOT ELEVATIONS**
NONE	NONE

26. OTHER PHYSICAL FEATURES: CHB

CULTURAL FEATURES

27. ROADS	28. BUILDINGS	29. RAILROADS
CHB	CHB	CHB

30. OTHER CULTURAL FEATURES: CHB

BOUNDARIES

31. BOUNDARY LINES	32. PUBLIC LAND LINES
NONE	NONE

MISCELLANEOUS

33. GEOGRAPHIC NAMES	34. JUNCTIONS
CHB	CHB

35. LEGIBILITY OF THE MANUSCRIPT	36. DISCREPANCY OVERLAY	37. DESCRIPTIVE REPORT
CHB	Comparison-Field Edit	CHB

38. FIELD INSPECTION PHOTOGRAPHS	39. FORMS
CHB	CHB

SIGNATURE OF REVIEWER	SIGNATURE OF SUPERVISOR, REVIEW SECTION OR UNIT
Charles H. Bishop	Albert C. Rauck Jr

40. FIELD COMPLETION ADDITIONS AND CORRECTIONS TO THE MANUSCRIPT-Additions and corrections furnished by the field completion survey have been applied to the manuscript. The manuscript is now complete except as noted in remarks on reverse side.

SIGNATURE OF COMPILER	SIGNATURE OF SUPERVISOR
Billy H. Barnes	Albert C. Rauck Jr

B.B

USE REVERSE SIDE FOR REMARKS

USCOMM-DC 25353-P61

FORM 182 (3-61)

U.S. DEPARTMENT OF COMMERCE
COAST AND GEODETIC SURVEY

50 PHOTOGRAMMETRIC OFFICE REVIEW

Chart 635 T-12821E

1. PROJECTION AND GRIDS: CHB	2. TITLE: NONE — 4a Classification label: Unclassified		3. MANUSCRIPT NUMBERS: CHB	4. MANUSCRIPT SIZE: CHB

CONTROL STATIONS

5. HORIZONTAL CONTROL STATIONS OF THIRD-ORDER OR HIGHER ACCURACY: NONE		6. RECOVERABLE HORIZONTAL STATIONS OF LESS THAN THIRD-ORDER ACCURACY (TOPOGRAPHIC STATIONS): NONE	
7. PHOTO HYDRO STATIONS: NONE	8. BENCH MARKS: NONE	9. PLOTTING OF SEXTANT FIXES: CHB	10. PHOTOGRAMMETRIC PLOT REPORT: Bridge
11. DETAIL POINTS: Kelsh			

ALONGSHORE AREAS (Nautical Chart Data)

12. SHORELINE: CHB	13. LOW-WATER LINE: NONE	14. ROCKS, SHOALS, ETC.: CHB	15. BRIDGES: CHB
16. AIDS TO NAVIGATION: CHB	17. LANDMARKS: CHB	18. OTHER ALONGSHORE PHYSICAL FEATURES: CHB	
19. OTHER ALONGSHORE CULTURAL FEATURES: CHB			

PHYSICAL FEATURES

20. WATER FEATURES: CHB	21. NATURAL GROUND COVER: CHB
22. PLANETABLE CONTOURS: NONE	23. STEREOSCOPIC INSTRUMENT CONTOURS: NONE
24. CONTOURS IN GENERAL: NONE	25. SPOT ELEVATIONS: NONE
26. OTHER PHYSICAL FEATURES: CHB	

CULTURAL FEATURES

27. ROADS: CHB	28. BUILDINGS: CHB	29. RAILROADS: CHB
30. OTHER CULTURAL FEATURES: CHB		

BOUNDARIES

31. BOUNDARY LINES: NONE	32. PUBLIC LAND LINES: NONE

MISCELLANEOUS

33. GEOGRAPHIC NAMES: CHB		34. JUNCTIONS: CHB
35. LEGIBILITY OF THE MANUSCRIPT: CHB	36. DISCREPANCY OVERLAY: Comparison-Field Edit	37. DESCRIPTIVE REPORT: CHB
38. FIELD INSPECTION PHOTOGRAPHS: CHB	39. FORMS: CHB	
SIGNATURE OF REVIEWER: Charles H Bishop	SIGNATURE OF SUPERVISOR, REVIEW SECTION OR UNIT: Albert C. Rauck Jr.	

40. FIELD COMPLETION ADDITIONS AND CORRECTIONS TO THE MANUSCRIPT - Additions and corrections furnished by the field completion survey have been applied to the manuscript. The manuscript is now complete except as noted in remarks on reverse side.

SIGNATURE OF COMPILER: Lowell O. Peterson Jr.	SIGNATURE OF SUPERVISOR: Albert C. Rauck Jr.

L.N

USE REVERSE SIDE FOR REMARKS

USCOMM-DC 25353-P61

FORM 182 (3-61)

50 **PHOTOGRAMMETRIC OFFICE REVIEW**
Chart 635 T-12822

U.S. DEPARTMENT OF COMMERCE
COAST AND GEODETIC SURVEY

1. PROJECTION AND GRIDS	2. TITLE	3. MANUSCRIPT NUMBERS	4. MANUSCRIPT SIZE
CHB	NONE Unclassified As Classification label	CHB	CHB

CONTROL STATIONS

5. HORIZONTAL CONTROL STATIONS OF THIRD-ORDER OR HIGHER ACCURACY	6. RECOVERABLE HORIZONTAL STATIONS OF LESS THAN THIRD-ORDER ACCURACY (TOPOGRAPHIC STATIONS)
NONE	NONE

7. PHOTO HYDRO STATIONS	8. BENCH MARKS	9. PLOTTING OF SEXTANT FIXES	10. PHOTOGRAMMETRIC PLOT REPORT
NONE	NONE	NONE	Bridge

11. DETAIL POINTS: Kelsh

ALONGSHORE AREAS (Nautical Chart Data)

12. SHORELINE	13. LOW-WATER LINE	14. ROCKS, SHOALS, ETC.	15. BRIDGES
CHB	NONE	CHB	CHB

16. AIDS TO NAVIGATION	17. LANDMARKS	18. OTHER ALONGSHORE PHYSICAL FEATURES
CHB	CHB	CHB

19. OTHER ALONGSHORE CULTURAL FEATURES: CHB

PHYSICAL FEATURES

20. WATER FEATURES	21. NATURAL GROUND COVER
CHB	CHB
22. PLANETABLE CONTOURS	23. STEREOSCOPIC INSTRUMENT CONTOURS
NONE	NONE
24. CONTOURS IN GENERAL	25. SPOT ELEVATIONS
NONE	NONE

26. OTHER PHYSICAL FEATURES: CHB

CULTURAL FEATURES

27. ROADS	28. BUILDINGS	29. RAILROADS
CHB	CHB	CHB

30. OTHER CULTURAL FEATURES: CHB

BOUNDARIES

31. BOUNDARY LINES	32. PUBLIC LAND LINES
NONE	NONE

MISCELLANEOUS

33. GEOGRAPHIC NAMES	34. JUNCTIONS
CHB	21 E. CHB 23 N. CHB

35. LEGIBILITY OF THE MANUSCRIPT	36. DISCREPANCY OVERLAY	37. DESCRIPTIVE REPORT
CHB	Comparison-Field Edit	CHB

38. FIELD INSPECTION PHOTOGRAPHS	39. FORMS
CHB	CHB
SIGNATURE OF REVIEWER: Charles H. Bishop	SIGNATURE OF SUPERVISOR, REVIEW SECTION OR UNIT: Albert C. Rauch Jr.

40. **FIELD COMPLETION ADDITIONS AND CORRECTIONS TO THE MANUSCRIPT**-Additions and corrections furnished by the field completion survey have been applied to the manuscript. The manuscript is now complete except as noted in remarks on reverse side.

SIGNATURE OF COMPILER	SIGNATURE OF SUPERVISOR
Bernice Wilson	Albert C. Rauch Jr.

USE REVERSE SIDE FOR REMARKS

B.W

FORM 182 (3-61)

U.S. DEPARTMENT OF COMMERCE
COAST AND GEODETIC SURVEY

50- PHOTOGRAMMETRIC OFFICE REVIEW

Chart 635 T-12823N

1. PROJECTION AND GRIDS: CHB	2. TITLE: NONE	4a Classification label: Unclassified	3. MANUSCRIPT NUMBERS: CHB	4. MANUSCRIPT SIZE: CHB

CONTROL STATIONS

5. HORIZONTAL CONTROL STATIONS OF THIRD-ORDER OR HIGHER ACCURACY: NONE		6. RECOVERABLE HORIZONTAL STATIONS OF LESS THAN THIRD-ORDER ACCURACY (TOPOGRAPHIC STATIONS): NONE	
7. PHOTO HYDRO STATIONS: NONE	8. BENCH MARKS: NONE	9. PLOTTING OF SEXTANT FIXES: NONE	10. PHOTOGRAMMETRIC PLOT REPORT: Bridge
11. DETAIL POINTS: Kelsh			

ALONGSHORE AREAS (Nautical Chart Data)

12. SHORELINE: CHB	13. LOW-WATER LINE: NONE	14. ROCKS, SHOALS, ETC.: CHB	15. BRIDGES: CHB
16. AIDS TO NAVIGATION: CHB	17. LANDMARKS: CHB	18. OTHER ALONGSHORE PHYSICAL FEATURES: CHB	
19. OTHER ALONGSHORE CULTURAL FEATURES: CHB			

PHYSICAL FEATURES

20. WATER FEATURES: CHB	21. NATURAL GROUND COVER: CHB
22. PLANETABLE CONTOURS: NONE	23. STEREOSCOPIC INSTRUMENT CONTOURS: NONE
24. CONTOURS IN GENERAL: NONE	25. SPOT ELEVATIONS: NONE
26. OTHER PHYSICAL FEATURES: CHB	

CULTURAL FEATURES

27. ROADS: CHB	28. BUILDINGS: CHB	29. RAILROADS: CHB
30. OTHER CULTURAL FEATURES: CHB		

BOUNDARIES

31. BOUNDARY LINES: NONE	32. PUBLIC LAND LINES: NONE

MISCEL-LANEOUS

33. GEOGRAPHIC NAMES: CHB		34. JUNCTIONS: CHB
35. LEGIBILITY OF THE MANUSCRIPT: CHB	36. DISCREPANCY OVERLAY: Comparison-Field Edit	37. DESCRIPTIVE REPORT: CHB
38. FIELD INSPECTION PHOTOGRAPHS: CHB		39. FORMS: CHB
SIGNATURE OF REVIEWER: Charles H. Bishop		SIGNATURE OF SUPERVISOR, REVIEW SECTION OR UNIT: Albert C. Rauch Jr.

40. FIELD COMPLETION ADDITIONS AND CORRECTIONS TO THE MANUSCRIPT-Additions and corrections furnished by the field completion survey have been applied to the manuscript. The manuscript is now complete except as noted in remarks on reverse side.

SIGNATURE OF COMPILER: Harry J. Cordell	SIGNATURE OF SUPERVISOR: Albert C. Rauch Jr.

A. C.

USE REVERSE SIDE FOR REMARKS

USCOMM-DC 25353-P61

FORM 182 (3-61)

U.S. DEPARTMENT OF COMMERCE
COAST AND GEODETIC SURVEY

50- PHOTOGRAMMETRIC OFFICE REVIEW

Chart 635 T-12823S

1. PROJECTION AND GRIDS	2. TITLE	4a Classification label Unclassified	3. MANUSCRIPT NUMBERS	4. MANUSCRIPT SIZE
CHB	NONE		CHB	CHB

CONTROL STATIONS

5. HORIZONTAL CONTROL STATIONS OF THIRD-ORDER OR HIGHER ACCURACY	6. RECOVERABLE HORIZONTAL STATIONS OF LESS THAN THIRD-ORDER ACCURACY (TOPOGRAPHIC STATIONS)
NONE	NONE

7. PHOTO HYDRO STATIONS	8. BENCH MARKS	9. PLOTTING OF SEXTANT FIXES	10. PHOTOGRAMMETRIC PLOT REPORT
NONE	NONE	NONE	Bridge

11. DETAIL POINTS: Kelsh

ALONGSHORE AREAS (Nautical Chart Data)

12. SHORELINE	13. LOW-WATER LINE	14. ROCKS, SHOALS, ETC.	15. BRIDGES
CHB	NONE	CHB	NONE

16. AIDS TO NAVIGATION	17. LANDMARKS	18. OTHER ALONGSHORE PHYSICAL FEATURES
CHB	NONE	CHB

19. OTHER ALONGSHORE CULTURAL FEATURES: CHB

PHYSICAL FEATURES

20. WATER FEATURES	21. NATURAL GROUND COVER
CHB	CHB
22. PLANETABLE CONTOURS	23. STEREOSCOPIC INSTRUMENT CONTOURS
NONE	NONE
24. CONTOURS IN GENERAL	25. SPOT ELEVATIONS
NONE	NONE

26. OTHER PHYSICAL FEATURES: CHB

CULTURAL FEATURES

27. ROADS	28. BUILDINGS	29. RAILROADS
CHB	CHB	CHB

30. OTHER CULTURAL FEATURES: CHB

BOUNDARIES

31. BOUNDARY LINES	32. PUBLIC LAND LINES
NONE	NONE

MISCELLANEOUS

33. GEOGRAPHIC NAMES	34. JUNCTIONS
CHB	CHB

35. LEGIBILITY OF THE MANUSCRIPT	36. DISCREPANCY OVERLAY	37. DESCRIPTIVE REPORT
CHB	Comparison-Field Edit	CHB

38. FIELD INSPECTION PHOTOGRAPHS	39. FORMS
CHB	CHB

SIGNATURE OF REVIEWER	SIGNATURE OF SUPERVISOR, REVIEW SECTION OR UNIT
Charles H. Bishop	Albert C. Ranck Jr.

40. **FIELD COMPLETION ADDITIONS AND CORRECTIONS TO THE MANUSCRIPT**-Additions and corrections furnished by the field completion survey have been applied to the manuscript. The manuscript is now complete except as noted in remarks on reverse side.

SIGNATURE OF COMPILER	SIGNATURE OF SUPERVISOR
Noel G. Boyle	Albert C. Ranck Jr.

K.B

USE REVERSE SIDE FOR REMARKS

USCOMM-DC 25353-P61

FORM 182 (3-61)

U.S. DEPARTMENT OF COMMERCE
COAST AND GEODETIC SURVEY

PHOTOGRAMMETRIC OFFICE REVIEW

50- Chart 635 T-12824 W

1. PROJECTION AND GRIDS	2. TITLE	3. MANUSCRIPT NUMBERS	4. MANUSCRIPT SIZE
CHB	NONE	CHB	CHB

4a Classification label Unclassified

CONTROL STATIONS	5. HORIZONTAL CONTROL STATIONS OF THIRD-ORDER OR HIGHER ACCURACY: NONE		6. RECOVERABLE HORIZONTAL STATIONS OF LESS THAN THIRD-ORDER ACCURACY (TOPOGRAPHIC STATIONS): NONE	
	7. PHOTO HYDRO STATIONS: NONE	8. BENCH MARKS: NONE	9. PLOTTING OF SEXTANT FIXES: NONE	10. PHOTOGRAMMETRIC PLOT REPORT: Bridge
	11. DETAIL POINTS: Kelsh			
ALONGSHORE AREAS (Nautical Chart Data)	12. SHORELINE: CHB	13. LOW-WATER LINE: NONE	14. ROCKS, SHOALS, ETC.: CHB	15. BRIDGES: NONE
	16. AIDS TO NAVIGATION: CHB	17. LANDMARKS: NONE	18. OTHER ALONGSHORE PHYSICAL FEATURES: CHB	
	19. OTHER ALONGSHORE CULTURAL FEATURES: CHB			
PHYSICAL FEATURES	20. WATER FEATURES: CHB		21. NATURAL GROUND COVER: CHB	
	22. PLANETABLE CONTOURS: NONE		23. STEREOSCOPIC INSTRUMENT CONTOURS: NONE	
	24. CONTOURS IN GENERAL: NONE		25. SPOT ELEVATIONS: NONE	
	26. OTHER PHYSICAL FEATURES: CHB			
CULTURAL FEATURES	27. ROADS: CHB	28. BUILDINGS: CHB	29. RAILROADS: CHB	
	30. OTHER CULTURAL FEATURES: CHB			
BOUNDARIES	31. BOUNDARY LINES: NONE		32. PUBLIC LAND LINES: NONE	
MISCEL-LANEOUS	33. GEOGRAPHIC NAMES: CHB		34. JUNCTIONS: CHB	
	35. LEGIBILITY OF THE MANUSCRIPT: CHB	36. DISCREPANCY OVERLAY: Comparison-Field Edit	37. DESCRIPTIVE REPORT: CHB	
	38. FIELD INSPECTION PHOTOGRAPHS: CHB		39. FORMS: CHB	
	SIGNATURE OF REVIEWER: Charles H. Bishop		SIGNATURE OF SUPERVISOR, REVIEW SECTION OR UNIT: Albert C. Rauch Jr.	

40. FIELD COMPLETION ADDITIONS AND CORRECTIONS TO THE MANUSCRIPT-Additions and corrections furnished by the field completion survey have been applied to the manuscript. The manuscript is now complete except as noted in remarks on reverse side.

SIGNATURE OF COMPILER	SIGNATURE OF SUPERVISOR
Charles Blood	Albert C. Rauch Jr.

C B

USE REVERSE SIDE FOR REMARKS

USCOMM-DC 25353-P61

FORM 182 (3-61)

U.S. DEPARTMENT OF COMMERCE
COAST AND GEODETIC SURVEY

50- PHOTOGRAMMETRIC OFFICE REVIEW

CHART 635 T-12824E

1. PROJECTION AND GRIDS	2. TITLE	3. MANUSCRIPT NUMBERS	4. MANUSCRIPT SIZE
CHB	NONE 4a Classification label Unclassified	CHB	CHB

CONTROL STATIONS	5. HORIZONTAL CONTROL STATIONS OF THIRD-ORDER OR HIGHER ACCURACY NONE		6. RECOVERABLE HORIZONTAL STATIONS OF LESS THAN THIRD-ORDER ACCURACY (TOPOGRAPHIC STATIONS) NONE	
	7. PHOTO HYDRO STATIONS NONE	8. BENCH MARKS NONE	9. PLOTTING OF SEXTANT FIXES NONE	10. PHOTOGRAMMETRIC PLOT REPORT Bridge
	11. DETAIL POINTS Kelsh			
ALONGSHORE AREAS (Nautical Chart Data)	12. SHORELINE CHB	13. LOW-WATER LINE NONE	14. ROCKS, SHOALS, ETC. CHB	15. BRIDGES NONE
	16. AIDS TO NAVIGATION CHB	17. LANDMARKS NONE	18. OTHER ALONGSHORE PHYSICAL FEATURES CHB	
	19. OTHER ALONGSHORE CULTURAL FEATURES CHB			
PHYSICAL FEATURES	20. WATER FEATURES CHB		21. NATURAL GROUND COVER CHB	
	22. PLANETABLE CONTOURS NONE		23. STEREOSCOPIC INSTRUMENT CONTOURS NONE	
	24. CONTOURS IN GENERAL NONE		25. SPOT ELEVATIONS NONE	
	26. OTHER PHYSICAL FEATURES CHB			
CULTURAL FEATURES	27. ROADS CHB	28. BUILDINGS CHB	29. RAILROADS CHB	
	30. OTHER CULTURAL FEATURES CHB			
BOUNDARIES	31. BOUNDARY LINES NONE		32. PUBLIC LAND LINES NONE	
MISCEL-LANEOUS	33. GEOGRAPHIC NAMES CHB		34. JUNCTIONS CHB	
	35. LEGIBILITY OF THE MANUSCRIPT CHB	36. DISCREPANCY, OVERLAY Comparison-Field Edit	37. DESCRIPTIVE REPORT CHB	
	38. FIELD INSPECTION PHOTOGRAPHS CHB		39. FORMS CHB	
	SIGNATURE OF REVIEWER Charles H. Bishop		SIGNATURE OF SUPERVISOR, REVIEW SECTION OR UNIT Albert C. Rauch Jr.	

40. FIELD COMPLETION ADDITIONS AND CORRECTIONS TO THE MANUSCRIPT - Additions and corrections furnished by the field completion survey have been applied to the manuscript. The manuscript is now complete except as noted in remarks on reverse side.

SIGNATURE OF COMPILER	SIGNATURE OF SUPERVISOR
Harry J. Cordell H.C.J.	Albert C. Rauch Jr.

USE REVERSE SIDE FOR REMARKS

USCOMM-DC 25353-P61

FORM 182 (9-61)

U.S. DEPARTMENT OF COMMERCE
COAST AND GEODETIC SURVEY

50 PHOTOGRAMMETRIC OFFICE REVIEW

Chart 635 T-12825N

1. PROJECTION AND GRIDS	2. TITLE	3. MANUSCRIPT NUMBERS	4. MANUSCRIPT SIZE
CHB	NONE 4a Classification label Unclassified	CHB	CHB

CONTROL STATIONS	5. HORIZONTAL CONTROL STATIONS OF THIRD-ORDER OR HIGHER ACCURACY: NONE		6. RECOVERABLE HORIZONTAL STATIONS OF LESS THAN THIRD-ORDER ACCURACY (TOPOGRAPHIC STATIONS): NONE	
	7. PHOTO HYDRO STATIONS: NONE	8. BENCH MARKS: NONE	9. PLOTTING OF SEXTANT FIXES: NONE	10. PHOTOGRAMMETRIC PLOT REPORT: Bridge
	11. DETAIL POINTS: Kelsh			
ALONGSHORE AREAS (Nautical Chart Data)	12. SHORELINE: CHB	13. LOW-WATER LINE: NONE	14. ROCKS, SHOALS, ETC.: CHB	15. BRIDGES: NONE
	16. AIDS TO NAVIGATION: CHB	17. LANDMARKS: NONE	18. OTHER ALONGSHORE PHYSICAL FEATURES: CHB	
	19. OTHER ALONGSHORE CULTURAL FEATURES: CHB			
PHYSICAL FEATURES	20. WATER FEATURES: CHB		21. NATURAL GROUND COVER: CHB	
	22. PLANETABLE CONTOURS: NONE		23. STEREOSCOPIC INSTRUMENT CONTOURS: NONE	
	24. CONTOURS IN GENERAL: NONE		25. SPOT ELEVATIONS: NONE	
	26. OTHER PHYSICAL FEATURES: CHB			
CULTURAL FEATURES	27. ROADS: CHB	28. BUILDINGS: CHB	29. RAILROADS: CHB	
	30. OTHER CULTURAL FEATURES: CHB			
BOUNDARIES	31. BOUNDARY LINES: NONE		32. PUBLIC LAND LINES: NONE	
MISCEL-LANEOUS	33. GEOGRAPHIC NAMES: CHB		34. JUNCTIONS: CHB	
	35. LEGIBILITY OF THE MANUSCRIPT: CHB	36. DISCREPANCY OVERLAY: Comparison Field-Edit	37. DESCRIPTIVE REPORT: CHB	
	38. FIELD INSPECTION PHOTOGRAPHS: CHB		39. FORMS: CHB	
	SIGNATURE OF REVIEWER: Charles H. Bishop		SIGNATURE OF SUPERVISOR, REVIEW SECTION OR UNIT: Albert C. Rauck Jr.	

40. FIELD COMPLETION ADDITIONS AND CORRECTIONS TO THE MANUSCRIPT-Additions and corrections furnished by the field completion survey have been applied to the manuscript. The manuscript is now complete except as noted in remarks on reverse side.

SIGNATURE OF COMPILER	SIGNATURE OF SUPERVISOR
Charles Blood	Albert C. Rauck Jr.

C.B

USE REVERSE SIDE FOR REMARKS

USCOMM-DC 25353-P61

FORM 182 (3-61)

50- **PHOTOGRAMMETRIC OFFICE REVIEW**

Chart 635 T 12825 S

U.S. DEPARTMENT OF COMMERCE
COAST AND GEODETIC SURVEY

1. PROJECTION AND GRIDS: CHB	2. TITLE: NONE — 4a Classification label: Unclassified	3. MANUSCRIPT NUMBERS: CHB	4. MANUSCRIPT SIZE: CHB

CONTROL STATIONS

5. HORIZONTAL CONTROL STATIONS OF THIRD-ORDER OR HIGHER ACCURACY: NONE		6. RECOVERABLE HORIZONTAL STATIONS OF LESS THAN THIRD-ORDER ACCURACY (TOPOGRAPHIC STATIONS): NONE	
7. PHOTO HYDRO STATIONS: NONE	8. BENCH MARKS: NONE	9. PLOTTING OF SEXTANT FIXES: NONE	10. PHOTOGRAMMETRIC PLOT REPORT: Bridge
11. DETAIL POINTS: Kelsh			

ALONGSHORE AREAS (Nautical Chart Data)

12. SHORELINE: CHB	13. LOW-WATER LINE: NONE	14. ROCKS, SHOALS, ETC.: CHB	15. BRIDGES: NONE
16. AIDS TO NAVIGATION: CHB	17. LANDMARKS: NONE	18. OTHER ALONGSHORE PHYSICAL FEATURES: CHB	
19. OTHER ALONGSHORE CULTURAL FEATURES: CHB			

PHYSICAL FEATURES

20. WATER FEATURES: CHB	21. NATURAL GROUND COVER: CHB
22. PLANETABLE CONTOURS: NONE	23. STEREOSCOPIC INSTRUMENT CONTOURS: NONE
24. CONTOURS IN GENERAL: NONE	25. SPOT ELEVATIONS: NONE
26. OTHER PHYSICAL FEATURES: CHB	

CULTURAL FEATURES

27. ROADS: CHB	28. BUILDINGS: CHB	29. RAILROADS: CHB
30. OTHER CULTURAL FEATURES: CHB		

BOUNDARIES

31. BOUNDARY LINES: NONE	32. PUBLIC LAND LINES: NONE

MISCELLANEOUS

33. GEOGRAPHIC NAMES: CHB		34. JUNCTIONS: CHB
35. LEGIBILITY OF THE MANUSCRIPT: CHB	36. DISCREPANCY OVERLAY: Comparison-Field Edit	37. DESCRIPTIVE REPORT: CHB
38. FIELD INSPECTION PHOTOGRAPHS: CHB		39. FORMS: CHB
SIGNATURE OF REVIEWER: Charles H Bishop		SIGNATURE OF SUPERVISOR, REVIEW SECTION OR UNIT: Albert C. Rauck Jr.

40. FIELD COMPLETION ADDITIONS AND CORRECTIONS TO THE MANUSCRIPT - Additions and corrections furnished by the field completion survey have been applied to the manuscript. The manuscript is now complete except as noted in remarks on reverse side.

SIGNATURE OF COMPILER: F. Sullivan	SIGNATURE OF SUPERVISOR: Albert C. Rauck Jr.

USE REVERSE SIDE FOR REMARKS

U.S. COMM-DC 25353-P61

FORM CD-121 (9-22-59)
(PRES. BY A.O. 206-10)

UNITED STATES GOVERNMENT

Memorandum

U.S. DEPARTMENT OF COMMERCE
COAST AND GEODETIC SURVEY

IN REPLY REFER TO: WSC-6320

TO: Norfolk Regional Officer
Coast and Geodetic Survey
439 W. York Street
Norfolk, Virginia 23510

DATE: June 1, 1965

FROM: Chief, Photogrammetry Division

SUBJECT: Project 21510 (Compilation Notes and Completion Date)

(1) Compilation Limits

The limits of compilation have not been delineated on the projections as indicated under heading No. 6 of the Compilation Instructions. A copy of the final project diagram (with letter size copies attached) showing the approximate compilation limits (panel limits) will be forwarded. Delineate details approximately 1 inch beyond the limits of the panels.

(2) Mercator Values of State Grid Intersections

For both the South Carolina and Georgia state grids, separate IBM lists of Mercator values for each panel ("T" Sheet) for plotting intersections by coordinatograph are being forwarded. Due to the method of computation and projection size the lists include a large number of values for intersections falling outside the limits of delineation. Plot only those intersections falling within the area to be compiled.

(3) Panel Numbers

Do not use the panel numbers for manuscript designation (titles, indexes, correspondence, reports). Use only the "T" Sheet numbers.

(4) Completion Date

As a result of the heavy workload in connection with the Alaska earthquake projects, the project completion date was changed from June 30, 1965 to October 30, 1965 (Memorandum to Program Planning Staff from Chief, Photogrammetry Division, date February 18, 1965). The Nautical Chart Division has recently requested an earlier delivery date (October 1, 1965). We are committed to this new delivery date.

Sufficient data to start project work will be delivered to you by the end of May. This includes data for plotting state grid intersections and data for the first of three bridges. Additional field work (control) is required prior to completion of strips 2 and 3. If, after compilation is started, a change in delivery data seems advisable, please notify this office.

J. E. Waugh

Mr Sleeting

FORM CD-121 (9-63-CD)
APPROD. BY A.O. 206-18

UNITED STATES GOVERNMENT

Memorandum

U.S. DEPARTMENT OF COMMERCE
COAST AND GEODETIC SURVEY

IN REPLY REFER TO: 6320

TO: Norfolk Regional Officer
Coast and Geodetic Survey
439 West York Street
Norfolk, Virginia 23510

DATE: July 29, 1965

FROM: Acting Director

PH-6501

SUBJECT: Project PH-6506 - Modification of requirements for delivery of project data to the Nautical Chart Division

The following project data are forwarded to the Nautical Chart Division for photogrammetric surveys produced for use in nautical chart construction:

1. Chart compilation manuscripts (Chart Division and registration copies)
2. Final copies of Form 567
3. Discrepancy prints
4. Copies of the Descriptive reports

Additional project information is furnished to the Chart Division upon request.

The Registration Manuscript copies and the Descriptive Report copies for this project need not be forwarded along with the other data for delivery to the Chart Division on our committed delivery date of October 1, 1965.

In order to provide the Chart Division with the data required to start compilation on the delivery date, the following procedures are necessary:

[illegible] Jr.

cc
63

1. Apply field edit changes to the base manuscripts, then reproduce the bases for the Chart Division's manuscript copies. Ozalid copies shall also be produced;

2. Make preliminary reviews of the manuscripts;

3. Add (in pencil) to the ozalid copies information (identifying names of mapped objects, landmarks, aids, piles, notes, etc.) that would normally be furnished the Chart Division through the Registration Manuscript copy.

Additional information to be delivered to the Chart Division on October 1, 1965, includes:

1. A copy of the field edit report;

2. An informal review report covering the subjects outlined on page 505, Topographic Manual, Part II, for the final Washington Office review, shall be prepared and forwarded.

   The preceding information can be included on the ozalid copies of the manuscripts or submitted as written notes.

Production of the Registration Manuscript copy and final review shall be completed as soon as possible. All changes made during final review that effect the Chart Compilation Manuscript shall be called to the attention of the Washington Office Review Unit.

The field edit of project maps, the requirements for pre-field edit manuscript data, and the procedure to be followed in forwarding data to the field editor are as follows:

1. Only copies of the pencilled work sheets and supporting data are required;

2. Field edit data shall be forwarded from the Portsmouth Photogrammetric Unit directly to the field editor.

E. F. Hick Jr.
for James C. Tigon, Jr.

cc:
631, 6314, 6320

JOB PH-6501
SAVANNAH RIVER

NOTES FOR THE FIELD EDITOR

1. Trees in water

Along both banks of the Savannah River are numerous trees, dead trees, stumps, logs, etc. that could be seen on the color transparencies. Without the benefit of prior field inspection, most of these could not be seen on the 1:30,000 scale panchromatic photography.

It is believed that most of these could be delineated with a dashed line adjacent to the shorelines and labeled foul with trees, stumps or logs. Where this applies, it should be labeled on the photographs or on the field edit print.

The Washington (Rockville) Office has indicated that Charts Section may incorporate a general note on both new small craft charts to this effect.

2. Bluffs

The bluffs that could be seen on the photos were delineated with the Kelsh plotter as a dashed line representing the top and bottom and labeled with an approximate height. All bluffs should be verified from seaward to ascertain their value as landmarks. In this area, particularly the upper reaches of the Savannah River, landmarks may well be scarce, and any which you deem of particular landmark value will be charted. Others will not be charted. If you find that we may have missed any of prominence, please indicate these on the field edit print.

3. Aids to Navigation

Most of the aids which were roughly spotted by the field man have been shown. Most of these could not be seen on the contact photos, but could easily be seen on the color photos. In most instances, the aid was, as the field man indicated, on the downstream groin of a group of three or four. There are a few which could not be seen and lay in an area where there were no color photo coverage. These have been noted for your attention.

It has been suggested and the Rockville Office has concurred, that an effort on your part to determine the area of responsibility for these aids might be in order. If we could know who and if they were considering maintenance and numbering of these aids, the new numbering system, if any, could be utilized by the Chart Section.

This suggestion was brought about because so many of the existing aids were broken off and many had no numerical designation.

4. Boat Landings

Quadrangles covering the area, indicate names of many landings. These places have been named as an aid to you in determining the actual existence and placement of such landings and to assist you in your facility survey.

5. Verification and Location

Other points of detail which demand further verification and/or explanation are noted on the field edit prints.

Albert C. Rauch, Jr.

JOB PH-6601
Savannah River
Small Craft Facility Investigation
Charts 634-SC and 635-SC

General Notes

The investigation of small craft facilities was accomplished during the period of August 16 through August 31, 1965.

The facility survey was accomplished concurrently with the field edit of chart topography. The Savannah River was travelled by boat from Savannah to Augusta.

Nineteen facilities were visited and the standard form submitted for each. All of these are boat launching ramps, with the exception of three located near Augusta. No facilities were listed at Savannah as there was no specific marina etc. on these charts. However, it is known that the small boat operator could obtain any marine supply he wished at Savannah.

The boat launching ramps, both on the Georgia and South Carolina sides, are maintained, for the most part, by the State and County. Many names of landings will appear on the charts which have no facilities for launching boats. These areas are usually privately owned and are well known locally.

Two chart letters are submitted. One for the radio and Television towers at Savannah and one for the same at Augusta.

There are no storm warnings displayed.

All landmarks and aids to navigation were thoroughly investigated.

There were no regulations governing the operation of small craft.

Submitted:
September 1, 1965

Joseph K. Wilson
Chief Photo Party 759

Form 567
April 1945

DEPARTMENT OF COMMERCE
U. S. COAST AND GEODETIC SURVEY

NONFLOATING AIDS ~~OR LANDMARKS~~ FOR CHARTS

~~TO BE CHARTED~~ / TO BE DELETED } STRIKE OUT ONE

NORFOLK, VIRGINIA SEPT. 0, 1965

I recommend that the following objects which have *(~~have not~~)* been inspected from seaward to determine their value as landmarks be ~~charted~~ on *(deleted from)* the charts indicated.

The positions given have been checked after listing by L. SULLIVAN, A. SANTILLAN

J. BULL
Chief of Party.

STATE: GEORGIA AND SOUTH CAROLINA

CHARTING NAME	DESCRIPTION	SIGNAL NAME	POSITION LATITUDE ° ′	LATITUDE ″ D.M. METERS	LONGITUDE ° ′	LONGITUDE ″ D.P. METERS	DATUM	METHOD OF LOCATION AND SURVEY No.	DATE OF LOCATION	HARBOR CHART	INSHORE CHART	OFFSHORE CHART	CHARTS AFFECTED
	SAVANNAH RIVER ABOVE SAVANNAH												
*	DAY BEACON (No Number)	33 13	33 13	49.76 1534.0	81 49	45.28 1173.2	NA 1927 MERC.	PHOTO T-12823	VERIFICATION 8-31-65				635 S.C.
*	Aid is a single concrete pile found lying in water near grain (aid destroyed.)												31

This form shall be prepared in accordance with Hydrographic Manual, pages 800 to 804. Positions of charted landmarks and *nonfloating*

Form 567
April 1945

DEPARTMENT OF COMMERCE
U. S. COAST AND GEODETIC SURVEY

NONFLOATING AIDS OR LANDMARKS FOR CHARTS

TO BE CHARTED
TO BE DELETED } STRIKE OUT ONE

~~NORFOLK, VIRGINIA~~ ~~SEPT.~~ 19~~65~~

I recommend that the following objects which have *(have not)* been inspected from seaward to determine their value as landmarks be charted on *(deleted from)* the charts indicated.

The positions given have been checked after listing by L. SULLIVAN L. Sullivan
A. SANTILLAN A. Santillan

~~J. BULL~~ *Chief of Party.*

STATE GEORGIA

CHARTING NAME	DESCRIPTION	SIGNAL NAME	POSITION LATITUDE ° ′	LATITUDE ″ D.M. METERS	LONGITUDE ° ′	LONGITUDE ″ D.P. METERS	DATUM	METHOD OF LOCATION AND SURVEY No.	DATE OF LOCATION	HARBOR CHART	INSHORE CHART	OFFSHORE CHART	CHARTS AFFECTED
	CONTINENTAL CAN CO., STEEL,			~~44.92~~		~~13.17~~	NA 1927	PHOTO					
TANK	RED, WHITE, HT = 131 (266) FT.		33 19	~~1386.5~~	81 57	~~341.2~~	MERC.	~~T-12823N~~	~~2-26-65~~ AUG. 65		x		~~635 S.O.~~
	BRICK, WHITE,			~~16.27~~		~~54.17~~		T-12823N					
CHIMNEY	HT. = 33 (153) FT.		33 22	~~502.4~~	81 56	~~1403.5~~	"	T-12822	"		x		~~635 S.O.~~

This form shall be prepared in accordance with Hydrographic Manual, pages 800 to 804. Positions of charted landmarks and *nonfloating* [illegible] of the area and not by

Form 567
April 1945

DEPARTMENT OF COMMERCE
U. S. COAST AND GEODETIC SURVEY

~~NONFLOATING AIDS OR~~ LANDMARKS FOR CHARTS

TO BE CHARTED / ~~TO BE DELETED~~ } STRIKE OUT ONE

NORFOLK, VIRGINIA SEPT. 1965

I recommend that the following objects which have (~~have not~~) been inspected from seaward to determine their value as landmarks be charted on (~~delete from~~) the charts indicated.

The positions given have been checked after listing by L. SULLIVAN L. Sullivan, A. SANTILLAN A. Santillan

J. BULL
Chief of Party.

STATE	GEORGIA AND SOUTH CAROLINA														
			POSITION												
			LATITUDE*			LONGITUDE*									
CHARTING NAME	DESCRIPTION	SIGNAL NAME	° ′	″ D.M. METERS		° ′	″ D.P. METERS		DATUM	METHOD OF LOCATION AND SURVEY No.	DATE OF LOCATION	HARBOR CHART	INSHORE CHART	OFFSHORE CHART	CHARTS AFFECTED
STACK	MIDDLE ONE OF 3, CONCRETE HT. = 201 (321) FT.		33 26	04.28 / 132.4		81 54	39.78 / 1030.7		NA 1927 / MERC.	PHOTO T-12822 / T-12821E	2-26-65 / AUG. 65		x		635 S.C.
TOWER	TRANSMISSION, STEEL, EAST ONE, HT. = 142 (252) FT.		33 25	58.37 / 1804.0		81 54	52.99 / 1373.0		"	"	"		x		"
TOWER	TRANSMISSION, STEEL, WEST ONE, HT. = 148 (263) FT.		33 26	03.24 / 100.1		81 55	02.17 / 56.2		"	"	" "		x		"
DOME	(Augusta, St. Pauls Episcopal Church Spire, 1902) METAL COVERED DOME SHAPED CUPOLA. HT = 111 (231) FT.		33 28	32.32 / 999.1		81 57	41.17 / 1066.9		"	T-12821E	"		x		"
FLAGPOLE	(Augusta, (Ga.) Southern Finance Corp. Bldg. Flagpole, 1932) STEEL, ATOP BLDG. HT = 245 (365) FT.		33 28	30.68 / 948.6		81 57	53.92 / 1397.2		"	"	"		x		"

This form shall be prepared in accordance with Hydrographic Manual, pages 800 to 804. Positions of charted landmarks and *nonfloating*

36

Form 567
April 1945

DEPARTMENT OF COMMERCE
U. S. COAST AND GEODETIC SURVEY

~~NONFLOATING AIDS~~ OR LANDMARKS FOR CHARTS

TO BE CHARTED / ~~TO BE DELETED~~ — STRIKE OUT ONE

NORFOLK, VIRGINIA — SEPT. 19 65

I recommend that the following objects which have (~~have not~~) been inspected from seaward to determine their value as landmarks be charted on (~~deleted from~~) the charts indicated.

The positions given have been checked after listing by L. SULLIVAN L. Sullivan, A. SANTILLAN A. Santillan

J. BULL
Chief of Party.

STATE GEORGIA AND SOUTH CAROLINA

CHARTING NAME	DESCRIPTION	SIGNAL NAME	POSITION LATITUDE ° ′	LATITUDE ″ D.M. METERS	LONGITUDE ° ′	LONGITUDE ″ D.P. METERS	DATUM	METHOD OF LOCATION AND SURVEY No.	DATE OF LOCATION	HARBOR CHART	INSHORE CHART	OFFSHORE CHART	CHARTS AFFECTED
STACK	(Augusta, Sibley Powder Co. Obelisk Chimney, 1902) BRICK SQUARE HT. = 153 (273) FT.		33 29	12.61 / 390.0	81 59	33.15 / 859.1	NA 1927 MERC.	PHOTO T-12821 E & W	2-26-65 AUG. 65		x		635 S.C.
TANK	(STEEL, 6 LEGGED (NORTH AUGUSTA) (SOUTH CAROLINA) HT. = 134 (604) FT.		33 30	25.57 / 790.8	81 57	50.87 / 1318.1	"	"	"		x		"
TV TOWER	STEEL, RED, WHITE, (SOUTH CAROLINA) (NORTH AUGUSTA) HT. = 500 (970) FT.		33 30	21.34 / 660.0	81 57	43.85 / 1136.2	"	"	"		x		"
STACK	AUGUSTA WATER WORKS, RED BRICK, ROUND 1965, HT. = 105 (140)	FT	33 30	44.34 / 1371.5	82 00	08.96 / 232.2	"	T-12821W	8-31-65		x		"

This form shall be prepared in accordance with Hydrographic Manual, pages 800 to 804. Positions of charted landmarks and *nonfloating* aids to navigation [illegible] not by

Form 567
(4-61)

U.S. DEPARTMENT OF COMMERCE
COAST AND GEODETIC SURVEY

NONFLOATING AIDS OR ~~LANDMARKS~~ FOR CHARTS

TO BE CHARTED
~~TO BE REVISED~~
~~TO BE DELETED~~ } STRIKE OUT TWO

NORFOLK, VIRGINIA SEPT. 1965

I recommend that the following objects which have ~~(have not)~~ been inspected from seaward to determine their value as landmarks be charted on ~~(deleted from)~~ the charts indicated.

The positions given have been checked after listing by A. SANTILLAN A. Santillan

J. HULL
Chief of Party.

STATE GEORGIA AND SOUTH CAROLINA

CHARTING NAME	DESCRIPTION	SIGNAL NAME	POSITION LATITUDE* ° ′	LATITUDE* ″ D.M. METERS	LONGITUDE* ° ′	LONGITUDE* ″ D.P. METERS	DATUM	METHOD OF LOCATION AND SURVEY NO.	DATE OF LOCATION	HARBOR CHART	INSHORE CHART	OFFSHORE CHART	CHARTS AFFECTED
	SAVANNAH RIVER ABOVE SAVANNAH												
35	DAYBEACON 35 Black pointer on pile		32 51	14.69 451.1	81 27	25.63 664.0	NA 1927 MERC.	MOTO T-12825 S	MAR 65 8-31-65				635 S.C.

This form shall be prepared in accordance with Hydrographic Manual, Publication 20.2, Sec. 6-36, Fig. 79. Positions of charted landmarks and *nonfloating aids* to navigation, if redetermined, shall be reported on this form. Revisions shall show both the old and new positions. The data should be considered for the charts of the area and not by individual field survey sheets. Information under each column heading should be given.

* TABULATE SECONDS AND METERS

USCOMM-DC 25412-P61

38

Form 567
(4-61)

U.S. DEPARTMENT OF COMMERCE
COAST AND GEODETIC SURVEY

NONFLOATING AIDS OR ~~LANDMARKS~~ FOR CHARTS

TO BE CHARTED
~~TO BE REVISED~~
~~TO BE DELETED~~ } STRIKE OUT TWO

NORFOLK, VIRGINIA SEPT. 1965

I recommend that the following objects which have (~~have not~~) been inspected from seaward to determine their value as landmarks be charted on (~~deleted from~~) the charts indicated.

The positions given have been checked after listing by A. SANTILLAN A. Santillan J. BULL

Chief of Party.

STATE GEORGIA AND SOUTH CAROLINA

CHARTING NAME	DESCRIPTION	SIGNAL NAME	POSITION LATITUDE ° ′	LATITUDE ″ D. M. METERS	LONGITUDE ° ′	LONGITUDE ″ D. P. METERS	DATUM	METHOD OF LOCATION AND SURVEY NO.	DATE OF LOCATION	HARBOR CHART	INSHORE CHART	OFFSHORE CHART	CHARTS AFFECTED
	SAVANNAH RIVER ABOVE SAVANNAH								MAR. 65				
	DAYBEACON (No Number) Red pointer on pile		32 56	21.97 675.2	81 30	08.29 214.8	NA 1927 MERC.	PHOTO T-12825N	8-31-65				635 S.C.
	DAYBEACON (No Number) Black pointer on pile		32 56	45.41 1395.3	81 30	03.59 93.0	"	"	"				"
	DAYBEACON (No Number) Black pointer on pile)		32 58	05.53 170.0	81 29	56.77 1171.1	"	"	"				"
	DAYBEACON (No Number) Red pointer on pile		32 58	25.68 789.4	81 29	49.[illegible] 1284.0	"	"	"				"
45	DAYBEACON 45 Black pointer on pile		33 00	33.18 1020.5	81 29	38.47 996.8	"	"	"				"
	DAYBEACON (No Number) Red pointer on pile		33 00	38.68 1189.4	81 29	47.83 1239.3	"	"	"				"
	DAYBEACON (No Number) Black pointer on pile		33 01	41.50 1276.3	81 30	47.97 1243.0	"	T-12825N T-12826E	"				"
	DAYBEACON (No Number) Red pointer on pile		33 01	46.78 1438.[illegible]	81 31	13.79 357.4	"	"	"				"
	DAYBEACON (No Number) ~~Black pointer on pile~~		33 01	56.75 1745.5	81 31	31.56 817.9	"	"	"				"

This form shall be prepared in accordance with Hydrographic Manual, Publication 20.2, Sec. 6-36, Fig. 79. Positions of charted landmarks and *nonfloating aids* to navigation, if redetermined, shall be reported on *this form*. Revisions shall show both the old and new positions. The data should be considered for the charts of the area and not by individual field survey sheets. Information under each column heading should be given.

USCOMM-DC 23412-P61

* TABULATE SECONDS AND METERS

Form 567
(4-61)

U.S. DEPARTMENT OF COMMERCE
COAST AND GEODETIC SURVEY

NONFLOATING AIDS OR LANDMARKS FOR CHARTS

TO BE CHARTED
~~TO BE REVISED~~
~~TO BE DELETED~~ } STRIKE OUT TWO

NORFOLK, VIRGINIA SEPT. 1965

I recommend that the following objects which have *(have not)* been inspected from seaward to determine their value as landmarks be charted on *(deleted from)* the charts indicated.

The positions given have been checked after listing by ~~A. SANTILLAN~~ A Santillan

J. HULL
Chief of Party.

STATE GEORGIA AND SOUTH CAROLINA

CHARTING NAME	DESCRIPTION	SIGNAL NAME	POSITION LATITUDE* ° ′	LATITUDE* ″ D.M. METERS	LONGITUDE* ° ′	LONGITUDE* ″ D.P. METERS	DATUM	METHOD OF LOCATION AND SURVEY No.	DATE OF LOCATION	HARBOR CHART	INSHORE CHART	OFFSHORE CHART	CHARTS AFFECTED
	SAVANNAH RIVER												
	~~ABOVE SAVANNAH~~		~~32~~	~~[illegible]~~	~~81~~	~~32~~							
	DAYBEACON (No Number)		33	02 ~~28.23~~ ~~868.3~~	81	32 ~~24.97~~ ~~647.0~~	NA 1927 ~~MERC.~~	PHOTO T-1282~~1~~B	MAR. 65 8-31-65				635 S.C.
	~~Red pointer on pile~~												
	DAYBEACON (No Number)		33	02 ~~35.26~~ ~~1084.8~~	81	33 ~~12.23~~ ~~316.3~~	"	"	"				"
	~~Red pointer on pile~~												
	DAYBEACON (No Number)		33	05 ~~45.21~~ ~~1393.6~~	81	38 ~~59.23~~ ~~1534.7~~	"	T-1282~~1~~E T-1282~~1~~W	"				"
	~~Black pointer on pile~~												
	DAYBEACON (No Number)		33	06 ~~05.69~~ ~~175.1~~	81	39 ~~25.56~~ ~~662.3~~	"	"	"				"
	~~Black pointer on pile~~												
	DAYBEACON (No Number)		33	06 ~~13.84~~ ~~426.2~~	81	39 ~~36.43~~ ~~943.9~~	"	"	"				"
	~~Red pointer on pile~~												

This form shall be prepared in accordance with Hydrographic Manual, Publication 20.2, Sec. 6-36, Fig. 79. Positions of charted landmarks and *non-floating aids* to navigation, if redetermined, shall be reported on this form. Revisions shall show both the old and new positions. The data should be considered for the charts of the area and not by individual field survey sheets. Information under each column heading should be given.

USCOMM-DC 25412-P61

* TABULATE SECONDS AND METERS

10

Form 567
April 1945

DEPARTMENT OF COMMERCE
U. S. COAST AND GEODETIC SURVEY

NONFLOATING AIDS OR ~~LANDMARKS FOR~~ CHARTS

TO BE CHARTED / ~~TO BE DELETED~~ STRIKE OUT ONE

NORFOLK, VIRGINIA SEPT. 0, 1965

I recommend that the following objects which have ~~(have not)~~ been inspected from seaward to determine their value as landmarks be charted on ~~(deleted from)~~ the charts indicated.

The positions given have been checked after listing by L. SULLIVAN L. Sullivan

J. HULL
Chief of Party.

STATE GEORGIA AND SOUTH CAROLINA

CHARTING NAME	DESCRIPTION	SIGNAL NAME	POSITION LATITUDE ° ′	LATITUDE ″ D.M. METERS	LONGITUDE ° ′	LONGITUDE ″ D.P. METERS	DATUM	METHOD OF LOCATION AND SURVEY No.	DATE OF LOCATION	HARBOR CHART	INSHORE CHART	OFFSHORE CHART	CHARTS AFFECTED
	SAVANNAH RIVER ABOVE SAVANNAH												
	DAYBEACON (No Number) Black pointer on pile		33 06	17.71 / 5~~56.1~~	81 39	51.29 / 1328.9	NA 1927 MERC.	PHOTO T-12824W	MAR.65 8-31-65				635 S.C.
	DAYBEACON (No Number) Black pointer on pile		33 06	41.30 / 1271.4	81 40	52.94 / 1371.7	"	"	"				"
63 B	DAY BEACON 63 B Black pointer on pile		33 06	57.58 / 1772.6	81 42	12.62 / 326.9	"	"	"				"
	DAYBEACON (No Number) Black pointer on pile		33 07	39.19 / 1206.7	81 43	23.78 / 616.2	"	"	"				"
	DAYBEACON (No Number) Red pointer on pile		33 07	49.41 / 1521.5	81 43	31.01 / 803.5	"	"	"				"
	DAYBEACON (No Number) Black pointer on pile		33 07	55.86 / 1719.9	81 43	40.90 / 1059.8	"	"	"				"
	DAYBEACON (No Number) Red pointer on pile		33 08	11.02 / 339.4	81 44	03.47 / 90.0	"	"	"				"
	DAYBEACON (No Number) Black pointer on pile		33 08	18.72 / 576.6	81 44	17.83 / 461.9	"	"	"				"
72	DAYBEACON 72 Red pointer on pile		33 09	04.44 / 136.9	81 45	17.93 / 464.6	"	"	"				"

This form shall be prepared in accordance with Hydrographic Manual, pages 800 to 804. Positions of charted landmarks and *nonfloating*

41

Form 567
April 1945

DEPARTMENT OF COMMERCE
U. S. COAST AND GEODETIC SURVEY

NONFLOATING AIDS OR LANDMARKS FOR CHARTS

TO BE CHARTED / TO BE DELETED } STRIKE OUT ONE

~~NORFOLK, VIRGINIA~~ ~~SEPT.~~ 0, 1965

I recommend that the following objects which have *(have-not)* been inspected from seaward to determine their value as landmarks be charted on ~~*(deleted from)*~~ the charts indicated.

The positions given have been checked after listing by A. SANTILLAN A. Santillan

J. BULL
Chief of Party.

STATE: GEORGIA AND SOUTH CAROLINA

CHARTING NAME	DESCRIPTION	SIGNAL NAME	POSITION LATITUDE ° ′	LATITUDE ″ D.M. METERS	LONGITUDE ° ′	LONGITUDE ″ D.P. METERS	DATUM	METHOD OF LOCATION AND SURVEY No.	DATE OF LOCATION	HARBOR CHART	INSHORE CHART	OFFSHORE CHART	CHARTS AFFECTED
	SAVANNAH RIVER												
	~~ABOVE SAVANNAH~~								MAR-65				
74	DAYBEACON 74			05.07		02.98	NA 1927	PHOTO	8-31-65				635 S.C.
	~~Red Pointer on pile~~		33 11	156.3	81 46	77.3	~~NGRS~~	T-12823S					
	DAYBEACON (No Number)			30.43		54.99	"	"	"				"
	~~Black pointer on pile~~		33 12	937.9	81 45	1425.0							
	DAYBEACON (No Number)			31.48		92.32	"	"	"				"
	~~Red pointer on pile~~		33 13	970.5	81 49	60.0							

This form shall be prepared in accordance with Hydrographic Manual, pages 800 to 804. Positions of charted landmarks and *nonfloating*

42

Form 567
(4-61)

U.S. DEPARTMENT OF COMMERCE
COAST AND GEODETIC SURVEY

NONFLOATING AIDS OR LANDMARKS FOR CHARTS

TO BE CHARTED
~~TO BE REVISED~~
~~TO BE DELETED~~
STRIKE OUT TWO

~~NORFOLK, VIRGINIA~~ ~~SEPT.~~ 19 ~~65~~

I recommend that the following objects which have *(have not)* been inspected from seaward to determine their value as landmarks be charted on *(~~deleted from~~)* the charts indicated.

The positions given have been checked after listing by L. SULLIVAN L. Sullivan, A. SANTILLAN A. Santillan

J. BULL
Chief of Party.

STATE GEORGIA AND SOUTH CAROLINA

CHARTING NAME	DESCRIPTION	SIGNAL NAME	POSITION LATITUDE* ° ′	″ D.M. METERS	LONGITUDE* ° ′	″ D.P. METERS	DATUM	METHOD OF LOCATION AND SURVEY NO.	DATE OF LOCATION	HARBOR CHART	INSHORE CHART	OFFSHORE CHART	CHARTS AFFECTED
	SAVANNAH RIVER												
	~~ABOVE SAVANNAH~~												
	DAYBEACON (No Number)			~~50.34~~		~~08.59~~	NA 1927	PHOTO T-12823N	MAR. 65 8-31-65				635 S.C.
	Black pointer on pile		33 19	1553.5	81 54	222.6	MEHC.						
	DAYBEACON (No Number)		33 20	16.85	81 55	~~06.65~~ 172.2	"	"	"				"
	Black pointer on pile			520.0									
	DAYBEACON (No Number)		33 20	~~31.45~~	81 55	~~15.82~~	"	"	"				"
	Red pointer on pile			980.0		409.8							

This form shall be prepared in accordance with Hydrographic Manual, Publication 20.2, Sec. 6-36, Fig. 79. Positions of charted landmarks and *non-floating aids* to navigation, if redetermined, shall be reported on this form. Revisions shall show both the old and new positions. The data should be considered for the charts of the area and not by individual field survey sheets. Information under each column heading should be given.

* TABULATE SECONDS AND METERS

USCOMM-DC 25412-P61

43

Form 567
(4-61)

U.S. DEPARTMENT OF COMMERCE
COAST AND GEODETIC SURVEY

NONFLOATING AIDS ~~OR LANDMARKS~~ FOR CHARTS

TO BE CHARTED
~~TO BE REVISED~~
TO BE DELETED
} STRIKE OUT TWO

NORFOLK, VIRGINIA SEPT. 19 65

I recommend that the following objects which have ~~(have not)~~ been inspected from seaward to determine their value as landmarks be charted on ~~(deleted from)~~ the charts indicated.

The positions given have been checked after listing by L. SULLIVAN ~~L. NETERER, JR.~~ L. Sullivan Lowell O. Neterer Jr.

J. BULL
Chief of Party.

STATE GEORGIA AND SOUTH CAROLINA

CHARTING NAME	DESCRIPTION	SIGNAL NAME	POSITION LATITUDE* ° ′	LATITUDE* ″ D.M. METERS	LONGITUDE* ° ′	LONGITUDE* ″ D.P. METERS	DATUM	METHOD OF LOCATION AND SURVEY NO.	DATE OF LOCATION	HARBOR CHART	INSHORE CHART	OFFSHORE CHART	CHARTS AFFECTED
	SAVANNAH RIVER ABOVE SAVANNAH								MAR. 65				
100	DAYBEACON 100 Red pointer on pile		33 25	52.06 1608.7	81 55	04.02 104.2	NA 1927 MERC.	PHOTO T-12822 T-12821B	8-31-65				635 S.C.
	DAYBEACON (No Number) Red pointer on pile		33 26	28.50 880.8	81 54	47.98 1243.3	"	"	"				"
103	DAYBEACON 103 Black pointer on pile		33 26	37.80 1168.1	81 55	03.09 80.0	"	"	"				"

This form shall be prepared in accordance with Hydrographic Manual, Publication 20.2, Sec. 6-36, Fig. 79. Positions of charted landmarks and non-floating aids to navigation, if redetermined, shall be reported on this form. Revisions shall show both the old and new positions. The data should be considered for the charts of the area and not by individual field survey sheets. Information under each column heading should be given.

* TABULATE SECONDS AND METERS

USCOMM-DC 25412-P61

Form 567
(4-61)

U.S. DEPARTMENT OF COMMERCE
COAST AND GEODETIC SURVEY

NONFLOATING AIDS ~~OR LANDMARKS~~ FOR CHARTS

TO BE CHARTED
~~TO BE REVISED~~
~~TO BE DELETED~~ } STRIKE OUT TWO

NORFOLK, VIRGINIA SEPT. 0, 19 65

I recommend that the following objects which have ~~(have not)~~ been inspected from seaward to determine their value as landmarks be charted on ~~(deleted from)~~ the charts indicated.

The positions given have been checked after listing by L. SULLIVAN L. Sullivan, A. SANTILLAN A. Santillan

J. BULL
Chief of Party.

STATE	GEORGIA AND SOUTH CAROLINA														
			POSITION												
			LATITUDE*			LONGITUDE*									
CHARTING NAME	DESCRIPTION	SIGNAL NAME	°	′	″ D.M. METERS	°	′	″ D.P. METERS	DATUM	METHOD OF LOCATION AND SURVEY No.	DATE OF LOCATION	HARBOR CHART	INSHORE CHART	OFFSHORE CHART	CHARTS AFFECTED
	SAVANNAH RIVER														
	ABOVE SAVANNAH										MAR. 65				
	DAYBEACON 104				08.10			06.27	NA 1927	PHOTO	8-31-65				635 S.C.
104	Red pointer on pile		33	28	250.5	81	56	162.5	MERC.	T-12821E					
	DAYBEACON (No number)				44.50			39.93	"	"	"				"
	Red pointer on pile		33	28	448.5	81	56	1034.7							
	DAYBEACON (No number)		33	28	24.11			03.47	"	"	"				"
	Red pointer on pile				745.4	81	57	90.0							
					36.66			30.13			VERIFICATION				
*	DAYBEACON (No Number)		33	28	1133.4	81	57	780.8	"	"	"				"
*	This is a red daymark on single concrete														
	pile. It has been struck and is now lying														
	horizontally.														

This form shall be prepared in accordance with Hydrographic Manual, Publication 20.2, Sec. 6-36, Fig. 79. Positions of charted landmarks and *non-floating aids* to navigation, if redetermined, shall be reported on this form. Revisions shall show both the old and new positions. The data should be considered for the charts of the area and not by individual field survey sheets. Information under each column heading should be given.

* TABULATE SECONDS AND METERS

USCOMM-DC 25412-P61

45

REVIEW REPORT T-12821 through T-12825
COMPILATIONS FOR SMALL CRAFT CHART 635
JANUARY 1966

61. General Statement

See Summary (Page 6) in this Descriptive Report.

62. Comparison with Registered Topographic Surveys

There are no previously registered surveys in the area covered by these maps.

63. Comparison with Maps of Other Agencies

The quadrangles covering about 70% of this area are of 1938-1941 dates at a scale of 1:62,500; only two, Girard and Girard N.W., are recent (1964) and at 1:24,000.

The "cut-offs" in the Savannah River, by-passing the worst bends in the river, are the most prominent differences.

Some new bridges across the river and Augusta Municipal Airport are also evident changes.

Considerable drainage has been done; some of the ponds and streams names on the quadrangles could not be seen on the photographs.

64. Comparison with Contemporary Hydrographic Surveys

None available.

65. Comparison with Nautical Charts

None available.

66. Adequacy of Results and Future Surveys

These maps meet the National Standards of Map Accuracy and comply with Bureau requirements.

Details in a security area were omitted from the maps -- in accordance with instructions.

Reviewed by:

S. G. Blankenbaker

S. G. Blankenbaker

Charles Tiemann

Chief, Photogrammetric Branch

T. Ralph Sobieralski

Chief, Photogrammetry Division

John T. Boyer

Chief, Marine Charts Division

U.S. DEPARTMENT OF COMMERCE
COAST AND GEODETIC SURVEY

LETTER TRANSMITTING DATA

REFERENCE NO.
PH-91-66 (Cont.)

DATA AS LISTED BELOW WERE FORWARDED TO YOU BY (Check):

☐ ORDINARY MAIL ☐ AIR MAIL
☒ REGISTERED MAIL ☐ EXPRESS
☐ GBL (Give number) _____

TO:

THE DIRECTOR
COAST & GEODETIC SURVEY
WASHINGTON SCIENCE CENTER
ROCKVILLE, MARYLAND 20852

C 141

DATE FORWARDED
26 January 1966

NUMBER OF PACKAGES
4

NOTE: A separate transmittal letter is to be used for each type of data, as tidal data, seismology, geomagnetism, etc. State the number of packages and include an executed copy of the transmittal letter in each package. In addition the original and one copy of the letter should be sent under separate cover. The copy will be returned as a receipt. This form should not be used for correspondence or transmitting accounting documents.

PH-6501 (21510) SAVANNAH RIVER (Cont.)

PACKAGE NO. 2 (Cont.)

BLACK & WHITE CONTACT PRINTS (Bridging, Field Inspection, & Field Edit)

64 S 1323A thru 1339A (2 of 1323A & 1324A)
" " 1348A " 1355A, 1369A thru 1372A
" " 1377A " 1380A, 1397A thru 1399A
" " 1400A " 1406A, 1408A " 1416A (2 of 1412 A thru 1414A)
" " 9500 " 9506 , 9527 (2) " 9534
" " 9546 (2)" 9551 , 9564, 9565, 9592, 9593
" " 9610 thru 9612 (2 of 9611), 9627 thru 9635
" " 9654 " 9674

65 M 4474, 4475, 4487, 4488, 4492 thru 4499
" " 4513 thru 4524

FROM NORFOLK

1- Set So. Carolina, South Zone, Grid Intersection

1- Set Georgia, East Zone, Grid Intersection

NOTE: COMBINED F.E. SHEETS AND COMPARISON PRINTS FILED IN FEDERAL RECORDS CENTER

FORM C&GS-473
(12-8-61)

U.S. DEPARTMENT OF COMMERCE
COAST AND GEODETIC SURVEY

REFERENCE NO.
PH-166-66

LETTER TRANSMITTING DATA

DATA AS LISTED BELOW WERE FORWARDED TO YOU BY *(Check)*:

- [ ] ORDINARY MAIL
- [ ] AIR MAIL
- [X] REGISTERED MAIL
- [ ] EXPRESS
- [ ] GBL *(Give number)* _____

TO:

THE DIRECTOR
COAST & GEODETIC SURVEY
WASHINGTON SCIENCE CENTER
ROCKVILLE, MARYLAND 20852

ATTN: C 141

DATE FORWARDED
May 2, 1966

NUMBER OF PACKAGES
1

NOTE: A separate transmittal letter is to be used for each type of data, as tidal data, seismology, geomagnetism, etc. State the number of packages and include an executed copy of the transmittal letter in each package. In addition the original and one copy of the letter should be sent under separate cover. The copy will be returned as a receipt. This form should not be used for correspondence or transmitting accounting documents.

Project 21510
SAVANNAH RIVER (Small craft charts)

Contact ~~photos~~ with control identification

64 S 9529, 30, 31
64 M 4476
5 Forms 152 (CSI)

Sam: These were erroneously mis-filed and recently found. Thought you should have them.

Al.

ATTN: Mr. Sam Blankenbaker

FROM: *(Signature)*

Joseph Steinberg, For Director, Atlantic Marine Center

RECEIVED THE ABOVE
(Name, Division, Date)

Return receipted copy to:

ENVIROMENTAL SCIENCE SERVICES ADMINISTRATION
ATLANTIC MARINE CENTER
439 W. YORK STREET
NORFOLK, VIRGINIA 23510

USCOMM-DC

FORM C&GS-413
(1-61)

U.S. DEPARTMENT OF COMMERCE
COAST AND GEODETIC SURVEY

REFERENCE NO.
PH-91-66 (Cont.)

LETTER TRANSMITTING DATA

DATA AS LISTED BELOW WERE FORWARDED TO YOU BY (Check):

- [ ] ORDINARY MAIL
- [ ] AIR MAIL
- [X] REGISTERED MAIL
- [ ] EXPRESS
- [ ] GBL (Give number) _____

THE DIRECTOR
COAST & GEODETIC SURVEY
WASHINGTON SCIENCE CENTER
ROCKVILLE, MARYLAND 20852

ATTN: c 141

DATE FORWARDED
26 January 1966

NUMBER OF PACKAGES
4

NOTE: A separate transmittal letter is to be used for each type of data, as tidal data, seismology, geomagnetism, etc. State the number of packages and include an executed copy of the transmittal letter in each package. In addition the original and one copy of the letter should be sent under separate cover. The copy will be returned as a receipt. This form should not be used for correspondence or transmitting accounting documents.

PH-6501 (21510) SAVANNAH RIVER (Cont.)

PACKAGE NO. 4 (Cont.)

FROM. NORFOLK

Contact Prints -(Bridging)

64 M 4477 thru 4486, 4490 and 4491

64 S 9552 thru 9563, (9555 and 56 with Field Edit)
" " 9594 " 9597
" " 9601 " 9609 (9607 & 09 with Field Edit)

Contact Prints, with no data

64 S 9554, 9555, 9557, 9559, 9561, 9594, and 9609

~~[illegible]~~ CLASSIFIED
FILED IN RECORDS & INFORMATION SECTION (PHOTOGRAMMETRY DIVISION

FROM: (Signature)
Joseph Steinberg, For Director, Atlantic Marine Center

RECEIVED THE ABOVE
(Name, Division, Date)

Return receipted copy to:

NORFOLK REGIONAL OFFICE
439 W. YORK STREET
NORFOLK, VIRGINIA 23510

USCOMM-DC 8609-P62

PH-6501 (21510) SAVANNAH RIVER,
CHART TOPOGRAPHY
PHOTOGRAPHS FORWARDED TO
FEDERAL RECORDS CENTER

045	1323A THRU 1339A	64M 4511 (2 PRINTS)
	1348A THRU 1355A	4513
	1377A THRU 1380A	4514
	1369A THRU 1372A	4515 (2 PRINTS)
	1397A THRU 1406A	4516 (2 PRINTS)
	1408A THRU 1416A	4517 (2 PRINTS)
		4518
045	9500 THRU 9506	4519
	9527 THRU 9528	4520 (2 PRINTS)
	9529 (2 PRINTS)	4521 (2 PRINTS
	9530 (")	4522
	9531 (")	4523
	9532 THRU 9534	4524
	9546 THRU 9551	
	9564 and 9565	64M4434 THRU 4441
	9592 and 9593	64M4471
		4474 (2 PRINTS)
645	9627 THRU 9635	4475
	9610-9611-9612	4476 (2 PRINTS)
	9654-9655-9656	4487 (2 PRINTS)
	9674	4488
	FILED IN RECORDS & INFORMATION SECTION (CLASSIFIED photographs)	4494 (2 PRINTS)
	REFER TO TRANSMITTAL dated,	4497
	26, Jan. 1966	4499

FORM C&GS-8352
(3-25-63)

NAUTICAL CHART DIVISION

RECORD OF APPLICATION TO CHARTS

FILE WITH DESCRIPTIVE REPORT OF SURVEY NO. T-12821 thru 12825

INSTRUCTIONS

A basic hydrographic or topographic survey supersedes all information of like nature on the uncorrected chart.
1. Letter all information.
2. In "Remarks" column cross out words that do not apply.
3. Give reasons for deviations, if any, from recommendations made under "Comparison with Charts" in the Review.

CHART	DATE	CARTOGRAPHER	REMARKS
635-SC	7-1-68	C.A. WHITE	Full ~~Part Before~~ After Verification Review Inspection ~~Signed Via~~
			Drawing No. T-12821 E/2 & W/2 — T-12822 — T-12823 N/2 & S/2 —
			T-12824 E/2 & W/2 — T-12825 N/2
			Full Part Before After Verification Review Inspection Signed Via
			Drawing No.
			Full Part Before After Verification Review Inspection Signed Via
			Drawing No.
			Full Part Before After Verification Review Inspection Signed Via
			Drawing No.
			Full Part Before After Verification Review Inspection Signed Via
			Drawing No.
			Full Part Before After Verification Review Inspection Signed Via
			Drawing No.
			Full Part Before After Verification Review Inspection Signed Via
			Drawing No.
			Full Part Before After Verification Review Inspection Signed Via
			Drawing No.
			Full Part Before After Verification Review Inspection Signed Via
			Drawing No.
			Full Part Before After Verification Review Inspection Signed Via
			Drawing No.

FORM C&GS-8352 SUPERSEDES ALL EDITIONS OF FORM C&GS-975.

USCOMM-DC 6558-P63